The new degree of comfort.™

Rheem *Commercial Classic® Series* Package Gas Electric Unit

RKNL-C Series

With ClearControl™
Nominal Sizes 15-25 Tons [52.8-87.9 kW]
ASHRAE 90.1-2007 Compliant

RKNL-H Series

With ClearControl™ and VFD Technology
Nominal Sizes 15-25 Tons [52.8-87.9 kW]
ASHRAE 90.1-2010 Compliant

25 TON MODEL IS OUTSIDE THE SCOPE OF AHRI STANDARD 340/360

TABLE OF CONTENTS

RKNL-C/H STANDARD FEATURES INCLUDE:

- R-410A HFC refrigerant.
- Complete factory charged, wired and run tested.
- Scroll compressors with internal line break overload and high-pressure protection.
- Dual stage compressors.
- Convertible airflow – vertical downflow or horizontal sideflow.
- TXV refrigerant metering system on each circuit.
- High Pressure and Low Pressure/Loss of charge protection standard on all models.
- Solid Core liquid line filter drier on each circuit.
- Single slab, single pass designed evaporator and condenser coils facilitate easy cleaning for maintaining high efficiencies.
- Cooling operation up to 125 degree F ambient.
- Foil faced insulation encapsulated throughout entire unit minimizes airborne fibers from the air stream.
- Hinged major access door with heavy-duty gasketing, 1/4 turn latches and door retainers.
- Slide Out Indoor fan assembly for added service convenience.
- Powder Paint Finish meets ASTMB117 steel coated on each side for maximum protection. G90 galvanized.
- Base pan with drawn supply and return opening for superior water management.
- Forkable base rails for easy handling and lifting.
- Single point electrical connections.
- Internally sloped slide out condensate pan conforms to ASHRAE 62 standards.
- High performance belt drive motor with variable pitch pulleys and quick adjust belt system.
- Permanently lubricated evaporator, condenser and gas heat inducer motors.
- Condenser motors are internally protected, totally enclosed with shaft down design.
- 2 inch filter standard with slide out design.
- Two stage gas valve and direct spark ignition.
- Tubular heat exchange for long life and induced draft for efficiency and reliability.
- Solid state furnace control with on board diagnostics.
- 24 volt control system with resettable circuit breakers.
- Colored and labeled wiring.
- Copper tube/Aluminum Fin coils.
- Factory Installed Direct Digital Control (DDC) and sensors which can connect to LonWorks™ or BACnet® BAS systems for remote monitoring and control.
- (-H) Models with Variable Frequency Drive (VFD) meet ASHRAE 90.1-2010 and California Title 24

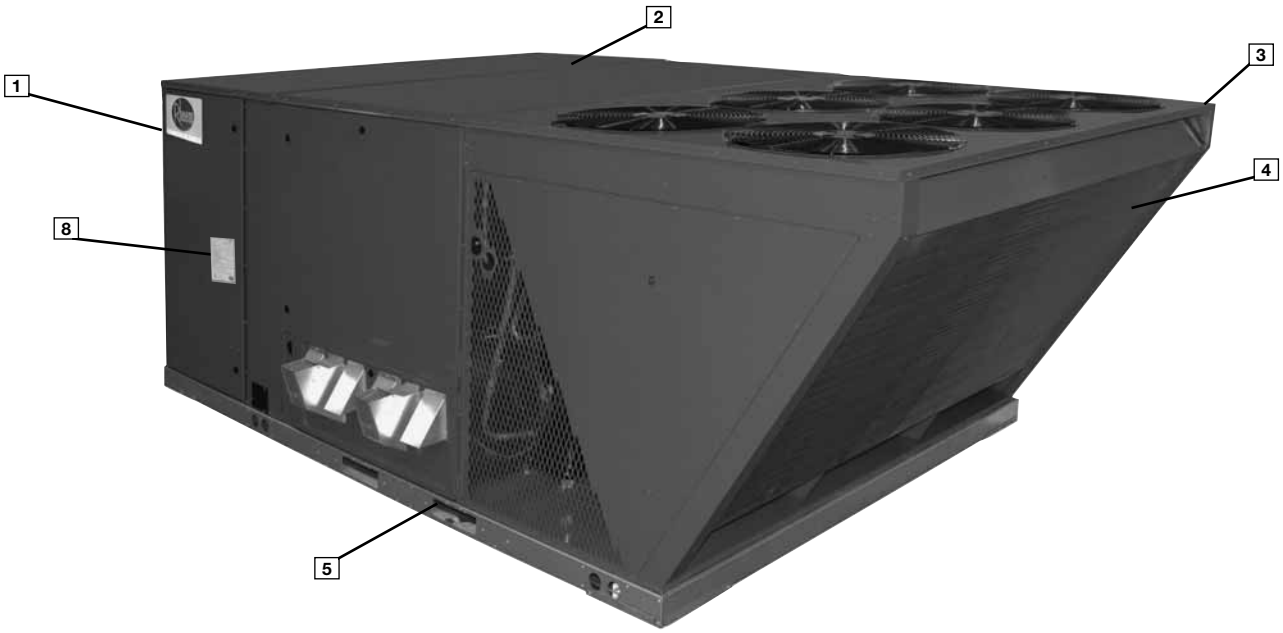

Rheem Package equipment is designed from the ground up with the latest features and benefits required to compete in today's market. The clean design stands alone in the industry and is a testament to the quality, reliability, ease of installation and serviceability that goes into each unit. Outwardly, the large Rheem *Commercial Series*™ label (1) identifies the brand to the customer.

The sheet-metal cabinet (2) uses nothing less than 20-gauge material for structural components with an underlying coat of G90. To ensure the leak-proof integrity of these units, the design utilizes a top with a 1/8" drip lip (3), gasket-protected panels and screws. The slanted outdoor coil protects the coil from hail damage (4). Every Rheem package unit uses the toughest finish in the industry, using electro deposition baked-on enamel tested to withstand a rigorous 1000-hour salt spray test, per ASTM B117.

Anything built to last must start with the right foundation. In this case, the foundation is 14-gauge, commercial-grade, full-perimeter base rails (5), which integrate fork slots and rigging holes to save set-up time on the job site. The base pan is stamped, which forms a 1-1/8" flange around the supply and return opening and has eliminated the worry of water entering the conditioned space (6). The drainpan (7) is made of material that resists the growth of harmful bacteria and is sloped for the latest IAQ benefits. Furthermore, the drainpan slides out for easy cleaning. The insulation has been placed on the underside of the basepan, removing areas that would allow for potential moisture accumulation, which can facilitate growth of harmful bacteria. All insulation is secured with both adhesive and mechanical fasteners, and all edges are hidden.

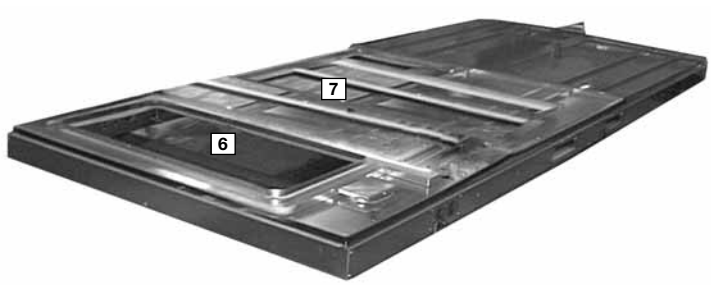

During development, each unit was tested to U.L. 1995, ANSI 21.47, AHRI 340-360 and other Rheem-required reliability tests. Rheem adheres to stringent IS0 9002 quality procedures, and each unit bears the U.L. and AHRI certification labels located on the unit nameplate (8). Contractors can rest assured that when a Rheem package unit arrives at the job, it is ready to go with a factory charge and quality checks.

Access to all major compartments is from the front of the unit, including the filter and electrical compartment, blower compartment, furnace section, and outdoor section. Each panel is permanently embossed with the compartment name (control/filter access, blower access and furnace access).

Electrical and filter compartment access is through a large, toolless, hinged-access panel with 1/4 turn latches. On the outside of the panel is the unit nameplate, which contains the model and serial number, electrical data and other important unit information.

The unit charging chart is located on the inside of the electrical and filter compartment door. Electrical wiring diagrams are found on the control box cover, which allows contractors to move them to more readable locations. To the right of the control box the model and serial number can be found. Having this information on the inside will assure model identification for the life of the product. The production line quality test assurance label is also placed in this location (9). The two-inch throwaway filters (10) are easily removed on a tracked system for easy replacement.

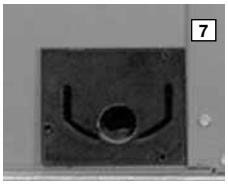

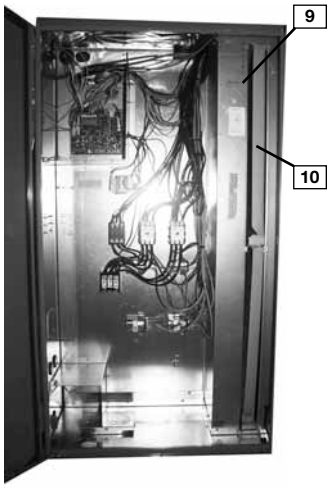

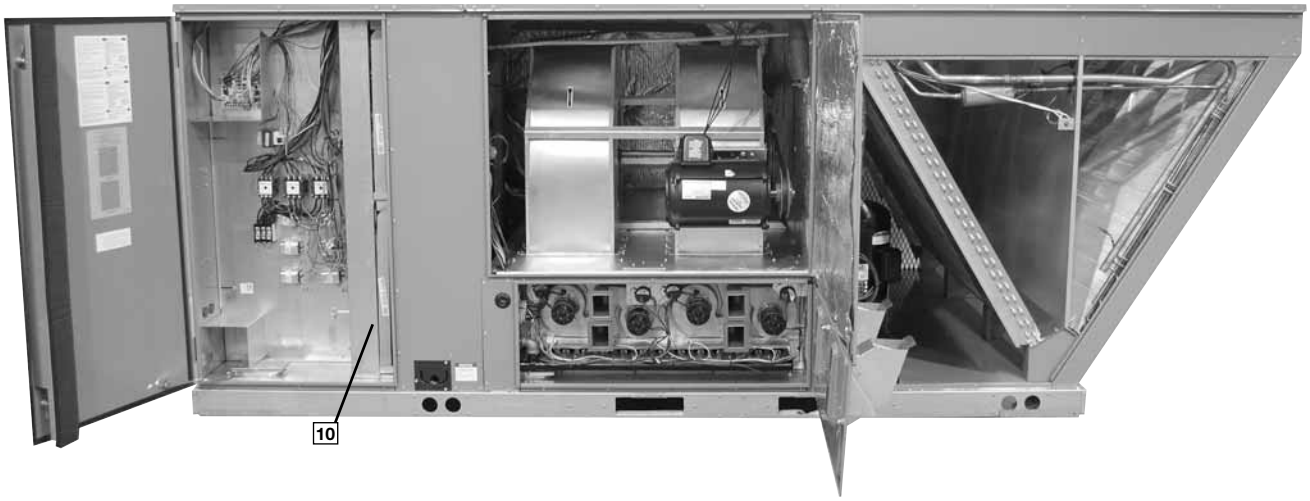

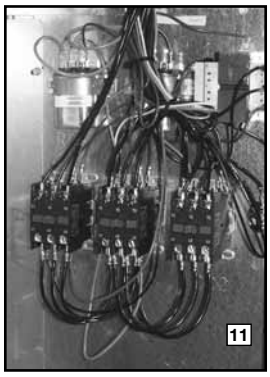

Inside the control box (11), each electrical component is clearly identified with a label that matches the component to the wire diagram for ease of trouble shooting. All wiring is numbered on each end of the termination and color-coded to match the wiring diagram. The integrated furnace control, used to control furnace operation, incorporates a flashing LED troubleshooting device. Flash codes are clearly outlined on the unit wiring diagram. The control transformer has a low voltage circuit breaker that trips if a low voltage electrical short occurs. There is a blower contactor and compressor contactor for each compressor.

As part of the ClearControl™ system which allows real time monitoring and communication between rooftop units, the RKNL-C/H Package Gas Electric Unit has a Rooftop Unit Controller (RTU-C) factory mounted and wired in the control panel. The RTU-C is a solid-state microprocessor-based control board that provides flexible control and extensive diagnostics for all unit functions. The RTU-C through proportional/integral control algorithms perform specific unit functions that govern unit operation in response to: zone conditions, system temperatures, system pressures, ambient conditions and electrical inputs. The RTU-C features a 16 x 2 character LCD display and a five-button keypad for local configuration and direct diagnosis of the system. New features include a clogged filter switch (CFS), fan proving switch (FPS), return air temperature sensor (RAT), discharge air temperature sensor (DAT) and outdoor air temperature sensor (OAT). Freeze sensors (FS) are used in place of freezestats to allow measurement of refrigerant suction line temperatures. The RKNL-C/H Package Gas/Electric with ClearControl™ is specifically designed to be applied in four distinct applications:

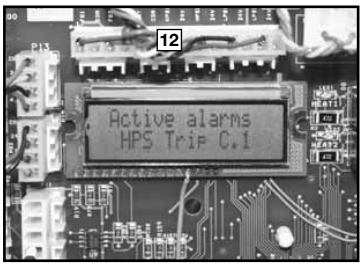

The RKNL-C/H is compatible with a third party building management system that supports the BACnet Application Specific Controller device profile, with the use of a field installed BACnet Communication Module. The BACnet Communication Module plugs onto the unit RTU-C controller and allows communication between ClearControl™ and the BACnet MSTP network. A zone sensor, a BACnet network zone sensor, a BACnet thermostat or DDC controller may be used to send the zone temperature or thermostat demands to the RTU-C. The BACnet Communication Module is compatible with MSTP EIA-485 daisy chain networks communicating at 38.4 bps. It is compatible with twisted pair, shielded cables.

The RKNL-C/H is compatible with a third party building management system that supports the LonMark Space Comfort Controller (SCC) functional profile or LonMark Discharge Air Controller (DAC) functional profile. This is accomplished with a field installed LonMark communication module. The LonMark Communication Module plugs onto the RTU-C controller and allows communication between ClearControl™ and a LonWorks Network. A zone sensor, a LonTalk network zone sensor, or a LonTalk thermostat or DDC controller may be used to send the zone temperature or thermostat demands to the RTU-C. The LonMark Communication Module utilizes an FTT-10A free topology transceiver communicating at 78.8 kbps. It is compatible with Echelon qualified twisted pair cable, Belden 8471 or NEMA Level 4 cables. The Module can communicate up to 1640 ft. with no repeater. The LonWorks limit of 64 nodes per segment applies to this device.

The RKNL-C/H is compatible with a programmable 24 volt thermostat. Connections are made via conventional thermostat screw terminals. Extensive unit status and diagnostics are displayed on the LCD screen of the RTU-C.

The RKNL-C/H is compatible with a zone sensor and mechanical or solid state time clock connected to the RTU-C. Extensive unit status and diagnostics are displayed on the LCD screen of the RTU-C.

A factory or field installed Comfort Alert® module is available for power phase-monitoring protection and additional compressor diagnostics. The alarms can be displayed on the RTU-C display, through the (BAS) network, or connected to the “L-Terminal” of a thermostat for notification.

-H models with factory installed VFD (13) (variable frequency drive) optimize energy usage year round by providing a lower speed for first stage cooling operation improving IEER's over the conventional constant fan system. Furthermore, operating in the constant fan mode at the reduced speed can use as little as 1/5th of the energy of a conventional constant fan system. Also, by operating at a lower speed on first stage cooling up to 51% more moisture is removed improving comfort during low load operation. The VFD equipped units meet California Title 24 and ASHRAE 90.1-2010 requirements for multi blower speed control. VFD also ramps up to the desire speed reducing stress on the supply fan components and reducing the noise from sudden inrush of air. Because the airflow is cut in half during first stage cooling and constant fan operation, noise is much less during these modes of operation.

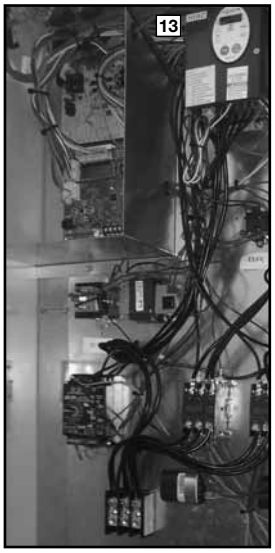

For added convenience in the field, a factory-installed convenience outlet and disconnect (14) are available. Low and High voltage can enter either from the side or through the base. Low-voltage connections are made through the low-voltage terminal strip. For ease of access, the U.L.-required low voltage barrier can be temporarily removed for low-voltage termination and then reinstalled. The high-voltage connection is terminated at the high-voltage terminal block. The suggested mounting for the field-installed disconnect is on the exterior side of the electrical control box.

In the outdoor section are the external gauge ports. (15). With gauge ports mounted externally, an accurate diagnostic of system operation can be performed quickly and easily.

The blower compartment is to the right of the control box and can be accessed by 1/4 turn latches. To allow easy maintenance of the blower assembly, the entire assembly easily slides out by removing four #10 screws from the blower assembly. The adjustable motor pulley (16) can easily be adjusted by loosening the bolts on either side of the motor mount. Removing the bolts allows for easy removal of the blower pulley by pushing the blower assembly up to loosen the belt. Once the belt is removed, the motor sheave can be adjusted to the desired number of turns, ranging from 1 to 6 turns open. Where the demands for the job require high static, Rheem has high-static drives available that deliver nominal airflow up to 2" of static. By referring to the airflow performance tables listed in the installation instructions, proper static pressure and CFM requirements can be dialed in. The scroll housing (17) and blower scroll provide quiet and efficient airflow. The blower sheave is secured by an "H" bushing which firmly secures the pulley to the blower shaft for years of trouble-free operation. The "H" bushing allows for easy removal of the blower pulley from the shaft, as opposed to the use of a set screw, which can score the shaft, creating burrs that make blower-pulley removal difficult.

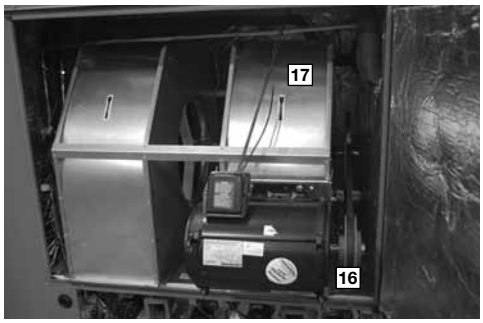

Also inside the blower compartment are the optional low-ambient controls (18). The low-ambient controls allow for operation of the compressor down to 0 degrees ambient temperature by cycling the outdoor fans on high pressure. Use of polarized plugs and schrader fittings allow for easy field or factory installation. The freeze sensor clips on the suction line near the evaporator outlet. The freeze sensor protects the compressor if the evaporator coil gets too cold (below freezing) due to low airflow and allows monitoring of the suction line temperature on the controller display.

Inside the blower compartment the interlaced evaporator can also be viewed. The evaporator uses enhanced fin technology for maximum heat transfer. The TXV metering device assures even distribution of refrigerant throughout the evaporator.

Wiring throughout the unit is neatly bundled and routed. Where wire harnesses go through the condenser bulkhead or blower deck, a molded wire harness assembly (19) provides an air-tight and water-tight seal, and provides strain relief. Care is also taken to tuck raw edges of insulation behind sheet metal to improve indoor air quality.

The furnace compartment contains the latest furnace technology on the market. The draft inducers (20) draw the flame from the Rheem exclusive in-shot burners (21) into the aluminized tubular heat exchanger (22) for clean, efficient gas heat. Stainless steel heat exchangers can be factory installed for those applications that have high fresh-air requirements, or applications in corrosive environments. Each furnace is equipped with a two-stage gas valve (23), which provides two stages of gas heat input. The first stage operates at 50% of the second stage (full fire). 81% steady state efficiency is maintained on both first and second stage by staging the multiple inducers to optimize the combustion airflow and maintain a near stoichiometric burn at each stage.

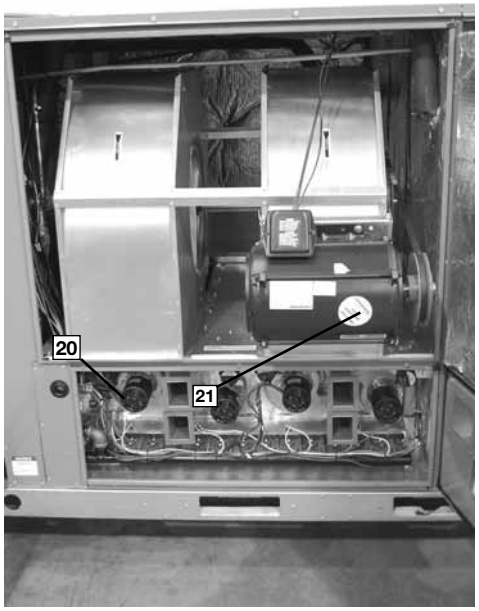

The direct spark igniter (24) assures reliable ignition in the most adverse conditions. This is coupled with remote flame sense (25) to assure that the flame has carried across the entire length of the burner assembly. Gas supply can be routed from the side or up through the base.

Each furnace has the following safety devices to assure consistent and reliable operation after ignition:

- Pressures switches (26) to assure adequate combustion airflow before ignition.
- Rollout switches (27) to assure no obstruction or cracks in the heat exchanger.
- A limit device that protects the furnace from over-temperature problems.

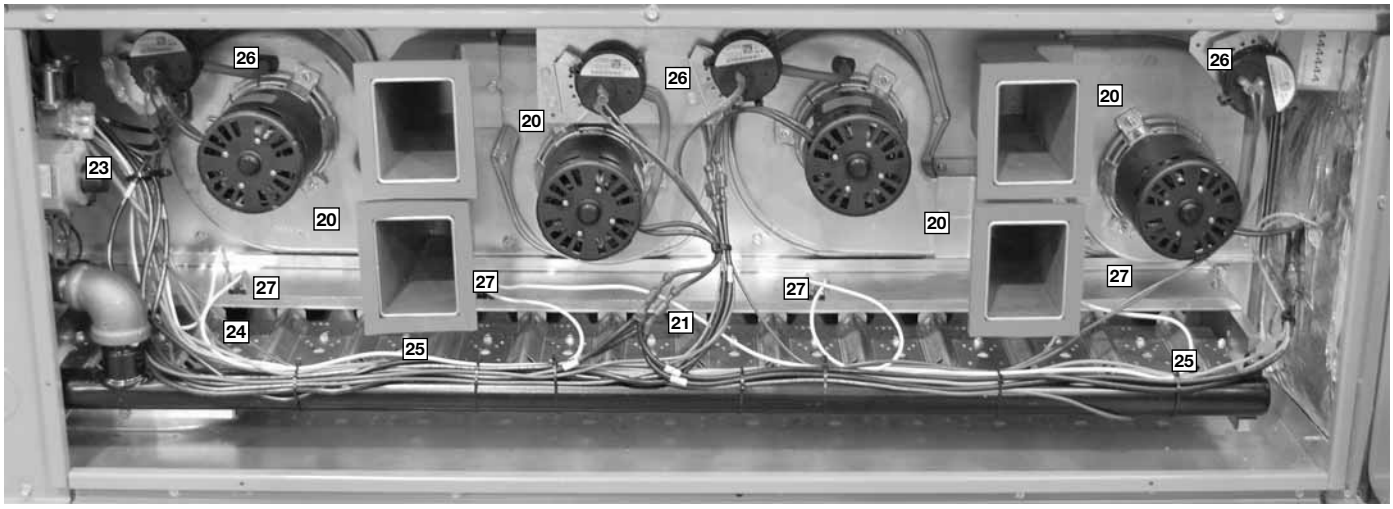

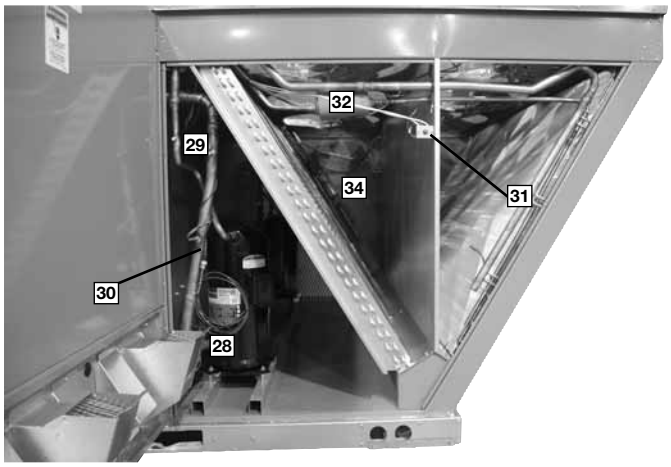

The compressor compartment houses the heartbeat of the unit. The scroll compressor (28) is known for its long life, and for reliable, quiet, and efficient operation. The suction and discharge lines are designed with shock loops (29) to absorb the strain and stress that the starting torque, steady state operation, and shut down cycle impose on the refrigerant tubing. Each compressor and circuit is independent for built-in redundancy, and each circuit is clearly marked throughout the system. Each unit has two stages of efficient cooling operation, first stage is approximately 50% of second stage.

The low-pressure switches (30) and high-pressure switches (31) are mounted on the appropriate refrigerant lines in the condenser section. The high-pressure switch will shut off the compressors if pressures exceeding 610 PSIG are detected as may occur if the outdoor fan motor fails. The low-pressure switches shut off the compressors if low pressure is detected due to loss of refrigerant charge. Each factory-installed option is brazed into the appropriate high or low side and wired appropriately. Use of polarized plugs allow for easy field inspection and repair.

Each unit comes standard with filter dryer (32). The condenser fan motor (33) can easily be accessed and maintained by removing the protective fan grille. The polarized plug connection allows the motor to be changed quickly and eliminates the need to snake wires through the unit. The outdoor coil uses the latest enhanced fin design (34) for the most effective method of heat transfer. The outdoor coil is slanted to protect it from Mother Nature.

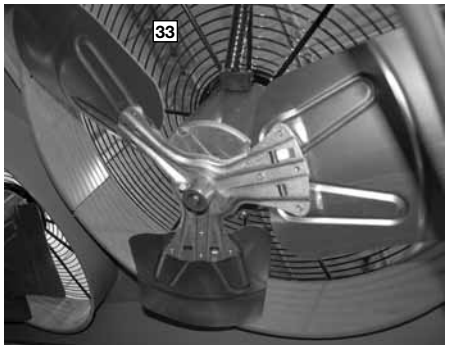

Each unit is designed for both downflow or horizontal applications (35) for job configuration flexibility. The return air compartment can also contain an economizer (36). Three models exists; two for downflow applications (a downflow economizer with factory installed smoke detector in the return section is available), and one for horizontal applications. Each unit is pre-wired for the economizer to allow quick plug-in installation. The downflow economizer is also available as a factory-installed option. Power Exhaust is easily field-installed. The economizer, which provides free cooling when outdoor conditions are suitable and also provides fresh air to meet local requirements, comes standard with single enthalpy controls. The controls can be upgraded to dual enthalpy easily in the field. The direct drive actuator combined with gear drive dampers has eliminated the need for linkage adjustment in the field.

The economizer control has a minimum position setpoint, an outdoor-air setpoint, a mix-air setpoint, and a CO_2 setpoint. Barometric relief is standard on all economizers. The power exhaust is housed in the barometric relief opening and is easily slipped in with a plug-in assembly. The wire harness to the economizer also has accommodations for a smoke detector.

The damper minimum position, actual damper position, power exhaust on/off setpoint, mixed air temperature limit setpoint and Demand Controlled Ventilation (DCV) setpoint can be read and adjusted at the unit controller display or remotely through a network connection.

The Space CO_2 level, mixed air temperature, and Economizer Status (Free Cooling Available, Single or Dual Enthalpy) can be read at the unit controller display or remotely through a network connection. Economizer Faults will trigger a network Alarm and can be read at the unit controller display or remotely through a network connection.

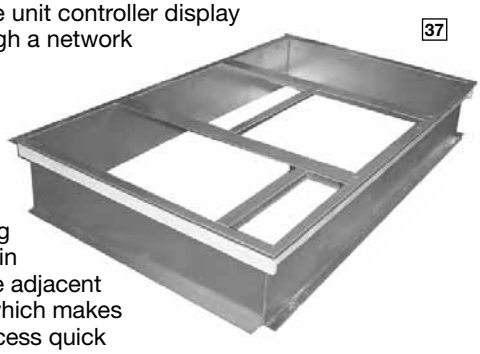

The Rheem roofcurb (37) is made for toolless assembly at the jobsite by inserting a pin into a hinge in each corner of the adjacent curb sides (38), which makes the assembly process quick and easy.

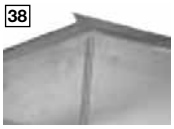

R K N L — C 180 C L 25 E X X X

- X — Economizer Option (See Next Page)
- X — Factory Installed Options (See Next Page)
- E — Ignition System
  E = Electric
- 25 — Heating Capacity (MBH)
  25 = 250,000 [73.27] 15 Ton
  30 = 300,000 [87.92] 20/25 Ton
  35 = 350,000 [102.57] 15 Ton
  40 = 400,000 [117.23] 20/25 Ton
- L — Drive Package
  L = Belt Drive
  M= Belt Drive—High Static
  N = Belt Drive—Field Installed
  R = VFD Belt Drive
  S = VFD Belt Drive High Static
  T = VFD Belt Drive High Static – Field Installed
- C — Electrical Designation
  C = 208-230 V, 3 PH, 60 Hz
  D = 460 V, 3 PH, 60 Hz
  Y = 575 V, 3 PH, 60 Hz
- 180 — Cooling Capacity (BTUH) [kW]
  180 = 180,000 [52.75]
  210 = 210,000 [61.54]
  240 = 240,000 [70.34]
  300 = 300,000 [87.92]
- C — Future Technical Variations
  C = ClearControl™ (DDC)
  H = ClearControl™ (DDC) with VFD
- L — Design Series
  L = R410A Refrigerant
- N — Efficiency Designation
  N = High Efficiency
  ASHRAE 90.1-2007 Compliant
  ASHRAE 90.1-2010 Compliant (with VFD)
- K — Product Classification
  K = Rooftop—Commercial
- R — Tradebrand
  R = Rheem Packaged Gas/Electric

[ ] Designates Metric Conversions

FACTORY INSTALLED OPTION CODES FOR RKNL-C/H (15-25 TON) [52.8-87.9 kW]

Option Code	Hail Guard	Stainless Steel Heat Exchanger	Non-Powered Convenience Outlet/Unfused Service Disconnect	Low Ambient/ Comfort Alert
AA	NO OPTIONS			
AD	x			
AJ		x		
AH			x	
AR				x
BF	x		x	
BG	x	x		
CY		x	x	x
JD	x			x
JB		x	x	
KA	x	x		x
DP	x	x	x	x

"x" indicates factory installed option.

ECONOMIZER SELECTION FOR RKNL-C/H (15-25 TON) [52.8-87.9 kW]

Option Code	No Economizer	DDC Single Enthalpy Economizer* With Barometric Relief	DDC Single Enthalpy Economizer* With Barometric Relief and Smoke Detector
A	x		
H		x	
J			x

"x" indicates factory installed option.
*Downflow economizer only.

Instructions for Factory Installed Option(s) Selection

Note: Three characters following the model number will be utilized to designate a factory-installed option or combination of options. If no factory option(s) is required, nothing follows the model number.

Step 1. After a basic rooftop model is selected, choose a *two-character* option code from the FACTORY INSTALLED OPTION SELECTION TABLE.

Proceed to Step 2.

Step 2. The last option code character is utilized for factory-installed economizers. Choose a character from the FACTORY INSTALLED ECONOMIZER SELECTION TABLE.

Example: RKNL-C240CL40E**XX**X *(where **XX** is factory installed option)*
Example: No Options
RKNL-C240CL40E
Example: No option with factory installed economizer
RKNL-C240CL40EAAH
Example: Options with low ambient and comfort alert, unwired convenience outlet, unfused service disconnect, and stainless steel heat exchanger with no factory installed economizer
RKNL-C240CL40ECYA
Example: Options same as above with factory installed economizer
RKNL-C240CL40ECYJ

To select an RKNL-C Cooling and Heating unit to meet a job requirement, follow this procedure, with example, using data supplied in this specification sheet.

1. DETERMINE COOLING AND HEATING REQUIREMENTS AND SPECIFIC OPERATING CONDITIONS FROM PLANS AND SPECS.

Example:

Voltage—	208/240V – 3 Phase – 60 Hz
Total Cooling Capacity—	205,000 BTUH [60.0 kW]
Sensible Cooling Capacity—	155,000 BTUH [45.4 kW]
Heating Capacity—	235,000 BTUH [68.8 kW]
*Condenser Entering Air—	95°F [35.0°C] DB
*Evaporator Mixed Air Entering—	65°F [18.3°C] WB
	78°F [25.6°C] DB
*Indoor Air Flow (vertical)—	7200 CFM [3398 L/s]
*External Static Pressure—	0.70 in. WG [.17 kPa]

2. SELECT UNIT TO MEET COOLING REQUIREMENTS.

Since total cooling is within the range of a nominal 20 ton [70.3 kW] unit, enter cooling performance table at 95°F [35.0°C] DB condenser inlet air. Interpolate between 63°F [17.2°C] WB and 67°F [19.4°C] to determine total and sensible capacity and power input for 65°F [18.3°C] WB evaporator inlet air at 7725 CFM [3645 L/s] indoor air flow (table basis):

Total Cooling Capacity = 238,250 BTUH [69.76 kW]
Sensible Cooling Capacity = 192,550 BTUH [56.38 kW]
Power Input (Compressor and Cond. Fans) = 18,200 watts

Use formula in note ① to determine sensible capacity at 78°F [25.6°C] DB evaporator entering air:

192,550 + (1.10 x 7,200 x (1 – 0.11) x (78 – 80))
Sensible Cooling Capacity = 178,452 BTUH [52.25 kW]

3. CORRECT CAPACITIES OF STEP 2 FOR ACTUAL AIR FLOW.

Select factors from airflow correction table at 7200 CFM [3398 L/s] and apply to data obtained in step 2 to obtain gross capacity:

Total Capacity = 238,250 x 0.99 = 235,868 BTUH [69.06 kW]
Sensible Capacity = 178,452 x 0.96 = 171,314 BTUH [50.16 kW]
Power Input = 18,200 x 0.99 = 18,018 Watts

These are Gross Capacities, not corrected for blower motor heat or power.

4. DETERMINE BLOWER SPEED AND WATTS TO MEET SYSTEM DESIGN.

Enter Indoor Blower performance table at 7200 CFM [3398 L/s]. Total ESP (external static pressure) per the spec of 0.70 in. WG [.17 kPa] includes the system duct and grilles. Add from the table "Component Air Resistance," 0.01 in. WG [.00 kPa] for wet coil, 0.08 in. WG [.02 kPa] for downflow air flow, for a total selection static pressure of 0.79 (0.8) in. WG [.20 kPa], and determine:

RPM = 739
WATTS = 2,862
DRIVE = L (standard 5 H.P. motor)

5. CALCULATE INDOOR BLOWER BTUH HEAT EFFECT FROM MOTOR WATTS, STEP 4.

2,862 x 3.412 = 9,765 BTUH [2.86 kW]

6. CALCULATE NET COOLING CAPACITIES, EQUAL TO GROSS CAPACITY, STEP 3, MINUS INDOOR BLOWER MOTOR HEAT.

Net Total Capacity = 235,868 – 9,765 = 226,103 BTUH [66.21 kW]
Net Sensible Capacity = 171,314 – 9,765 = 161,549 BTUH [47.30 kW]

7. CALCULATE UNIT INPUT AND JOB EER.

Total Power Input = 18,018 (step 3) + 2,862 (step 4) = 20,880 Watts

$$\text{EER} = \frac{\text{Net Total BTUH [kW] (step 6)}}{\text{Power Input, Watts (above)}} = \frac{226{,}103}{20{,}880} = 10.83$$

8. SELECT UNIT HEATING CAPACITY.

From Physical Data Table read that gas heating output (input rating x efficiency) is:

Heating Capacity = 243,000 BTUH [71.2 kW]

9. CHOOSE MODEL RKNL-C240CL30E.

*NOTE: These operating conditions are typical of a commercial application in a 95°F/79°F [35°C/26°C] design area with indoor design of 76°F [24°C] DB and 50% RH and 10% ventilation air, with the unit roof mounted and centered on the zone it conditions by ducts.

[ ] Designates Metric Conversions

NOM. SIZES 15-25 TONS [52.8-87.9 kW] MODELS

Model RKNL- Series Model RKNL- Series (with VFD)	C180CL25E H180CR25E	C180CL35E H180CR35E	C180CM25E H180CS25E	C180CM35E H180CS35E
Cooling Performance[1]				CONTINUED →
Gross Cooling Capacity Btu [kW]	188,000 [55.08]	188,000 [55.08]	188,000 [55.08]	188,000 [55.08]
EER/SEER[2]	11.1/NA	11.1/NA	11.1/NA	11.1/NA
Nominal CFM/AHRI Rated CFM [L/s]	6000/5900 [2831/2784]	6000/5900 [2831/2784]	6000/5900 [2831/2784]	6000/5900 [2831/2784]
AHRI Net Cooling Capacity Btu [kW]	182,000 [53.33]	182,000 [53.33]	182,000 [53.33]	182,000 [53.33]
Net Sensible Capacity Btu [kW]	135,700 [39.76]	135,700 [39.76]	135,700 [39.76]	135,700 [39.76]
Net Latent Capacity Btu [kW]	46,300 [13.57]	46,300 [13.57]	46,300 [13.57]	46,300 [13.57]
IEER[3] Latent (Standard / VFD)	12.4/14.4	12.4/14.4	12.4/14.4	12.4/14.4
Net System Power kW	16.35	16.35	16.35	16.35
Heating Performance (Gas)[4]				
Heating Input Btu [kW] (1st Stage / 2nd Stage)	125,000/250,000 [36.62/73.25]	175,000/350,000 [51.27/102.55]	125,000/250,000 [36.62/73.25]	175,000/350,000 [51.27/102.55]
Heating Output Btu [kW] (1st Stage / 2nd Stage)	101,250/202,500 [29.67/59.33]	141,750/283,500 [41.53/83.06]	101,250/202,500 [29.67/59.33]	141,750/283,500 [41.53/83.06]
Temperature Rise Range °F [°C] (1st Stage / 2nd Stage)	15-45 [8.3-25] / 15-45 [8.3-25]	30-60 [16.7-33.3] / 30-60 [16.7-33.3]	15-45 [8.3-25] / 15-45 [8.3-25]	30-60 [16.7-33.3] / 30-60 [16.7-33.3]
Steady State Efficiency (%)	81	81	81	81
No. Burners	10	14	10	14
No. Stages	2	2	2	2
Gas Connection Pipe Size in. [mm]	0.75 [19]	0.75 [19]	0.75 [19]	0.75 [19]
Compressor				
No./Type	2/Scroll	2/Scroll	2/Scroll	2/Scroll
Outdoor Sound Rating (dB)[5]	91	91	91	91
Outdoor Coil—Fin Type	Louvered	Louvered	Louvered	Louvered
Tube Type	Rifled	Rifled	Rifled	Rifled
Tube Size in. [mm] OD	0.375 [9.5]	0.375 [9.5]	0.375 [9.5]	0.375 [9.5]
Face Area sq. ft. [sq. m]	53.3 [4.95]	53.3 [4.95]	53.3 [4.95]	53.3 [4.95]
Rows / FPI [FPcm]	1 / 22 [9]	1 / 22 [9]	1 / 22 [9]	1 / 22 [9]
Indoor Coil—Fin Type	Louvered	Louvered	Louvered	Louvered
Tube Type	Rifled	Rifled	Rifled	Rifled
Tube Size in. [mm]	0.375 [9.5]	0.375 [9.5]	0.375 [9.5]	0.375 [9.5]
Face Area sq. ft. [sq. m]	26.67 [2.48]	26.67 [2.48]	26.67 [2.48]	26.67 [2.48]
Rows / FPI [FPcm]	2 / 18 [7]	2 / 18 [7]	2 / 18 [7]	2 / 18 [7]
Refrigerant Control	TX Valves	TX Valves	TX Valves	TX Valves
Drain Connection No./Size in. [mm]	1/1 [25.4]	1/1 [25.4]	1/1 [25.4]	1/1 [25.4]
Outdoor Fan—Type	Propeller	Propeller	Propeller	Propeller
No. Used/Diameter in. [mm]	4/24 [609.6]	4/24 [609.6]	4/24 [609.6]	4/24 [609.6]
Drive Type/No. Speeds	Direct/1	Direct/1	Direct/1	Direct/1
CFM [L/s]	16000 [7550]	16000 [7550]	16000 [7550]	16000 [7550]
No. Motors/HP	4 at 1/3 HP	4 at 1/3 HP	4 at 1/3 HP	4 at 1/3 HP
Motor RPM	1075	1075	1075	1075
Indoor Fan—Type	FC Centrifugal	FC Centrifugal	FC Centrifugal	FC Centrifugal
No. Used/Diameter in. [mm]	2/18x9 [457x229]	2/18x9 [457x229]	2/18x9 [457x229]	2/18x9 [457x229]
Drive Type	Belt (Adjustable)	Belt (Adjustable)	Belt (Adjustable)	Belt (Adjustable)
No. Speeds (Standard / VFD)	Single / Multiple	Single / Multiple	Single / Multiple	Single / Multiple
No. Motors	1	1	1	1
Motor HP	3	3	5	5
Motor RPM	1725	1725	1725	1725
Motor Frame Size	56	56	184	184
Filter—Type	Disposable	Disposable	Disposable	Disposable
Furnished	Yes	Yes	Yes	Yes
(NO.) Size Recommended in. [mm x mm x mm]	(8)2x25x20 [51x635x508]	(8)2x25x20 [51x635x508]	(8)2x25x20 [51x635x508]	(8)2x25x20 [51x635x508]
Refrigerant Charge Oz. (Sys. 1/Sys. 2) [g]	205/211 [5812/5982]	205/211 [5812/5982]	205/211 [5812/5982]	205/211 [5812/5982]
Weights				
Net Weight lbs. [kg]	1958 [888]	1971 [894]	1987 [901]	2000 [907]
Ship Weight lbs. [kg]	2084 [945]	2097 [951]	2113 [958]	2126 [964]

See Page 24 for Notes.

[ ] Designates Metric Conversions

NOM. SIZES 15-25 TONS [52.8-87.9 kW] MODELS

Model RKNL- Series Model RKNL- Series (with VFD)	C180DL25E H180DR25E	C180DL35E H180DR35E	C180DM25E H180DS25E	C180DM35E H180DS35E
Cooling Performance[1]				CONTINUED →
Gross Cooling Capacity Btu [kW]	188,000 [55.08]	188,000 [55.08]	188,000 [55.08]	188,000 [55.08]
EER/SEER[2]	11.1/NA	11.1/NA	11.1/NA	11.1/NA
Nominal CFM/AHRI Rated CFM [L/s]	6000/5900 [2831/2784]	6000/5900 [2831/2784]	6000/5900 [2831/2784]	6000/5900 [2831/2784]
AHRI Net Cooling Capacity Btu [kW]	182,000 [53.33]	182,000 [53.33]	182,000 [53.33]	182,000 [53.33]
Net Sensible Capacity Btu [kW]	135,700 [39.76]	135,700 [39.76]	135,700 [39.76]	135,700 [39.76]
Net Latent Capacity Btu [kW]	46,300 [13.57]	46,300 [13.57]	46,300 [13.57]	46,300 [13.57]
IEER[3] Latent (Standard / VFD)	12.4/14.4	12.4/14.4	12.4/14.4	12.4/14.4
Net System Power kW	16.35	16.35	16.35	16.35
Heating Performance (Gas)[4]				
Heating Input Btu [kW] (1st Stage / 2nd Stage)	125,000/250,000 [36.62/73.25]	175,000/350,000 [51.27/102.55]	125,000/250,000 [36.62/73.25]	175,000/350,000 [51.27/102.55]
Heating Output Btu [kW] (1st Stage / 2nd Stage)	101,250/202,500 [29.67/59.33]	141,750/283,500 [41.53/83.06]	101,500/203,000 [29.74/59.48]	143,250/286,500 [41.97/83.94]
Temperature Rise Range °F [°C] (1st Stage / 2nd Stage)	15-45 [8.3-25] / 15-45 [8.3-25]	30-60 [16.7-33.3] / 30-60 [16.7-33.3]	15-45 [8.3-25] / 15-45 [8.3-25]	30-60 [16.7-33.3] / 30-60 [16.7-33.3]
Steady State Efficiency (%)	81	81	81	81
No. Burners	10	14	10	14
No. Stages	2	2	2	2
Gas Connection Pipe Size in. [mm]	0.75 [19]	0.75 [19]	0.75 [19]	0.75 [19]
Compressor				
No./Type	2/Scroll	2/Scroll	2/Scroll	2/Scroll
Outdoor Sound Rating (dB)[5]	91	91	91	91
Outdoor Coil—Fin Type	Louvered	Louvered	Louvered	Louvered
Tube Type	Rifled	Rifled	Rifled	Rifled
Tube Size in. [mm] OD	0.375 [9.5]	0.375 [9.5]	0.375 [9.5]	0.375 [9.5]
Face Area sq. ft. [sq. m]	53.3 [4.95]	53.3 [4.95]	53.3 [4.95]	53.3 [4.95]
Rows / FPI [FPcm]	1 / 22 [9]	1 / 22 [9]	1 / 22 [9]	1 / 22 [9]
Indoor Coil—Fin Type	Louvered	Louvered	Louvered	Louvered
Tube Type	Rifled	Rifled	Rifled	Rifled
Tube Size in. [mm]	0.375 [9.5]	0.375 [9.5]	0.375 [9.5]	0.375 [9.5]
Face Area sq. ft. [sq. m]	26.67 [2.48]	26.67 [2.48]	26.67 [2.48]	26.67 [2.48]
Rows / FPI [FPcm]	2 / 18 [7]	2 / 18 [7]	2 / 18 [7]	2 / 18 [7]
Refrigerant Control	TX Valves	TX Valves	TX Valves	TX Valves
Drain Connection No./Size in. [mm]	1/1 [25.4]	1/1 [25.4]	1/1 [25.4]	1/1 [25.4]
Outdoor Fan—Type	Propeller	Propeller	Propeller	Propeller
No. Used/Diameter in. [mm]	4/24 [609.6]	4/24 [609.6]	4/24 [609.6]	4/24 [609.6]
Drive Type/No. Speeds	Direct/1	Direct/1	Direct/1	Direct/1
CFM [L/s]	16000 [7550]	16000 [7550]	16000 [7550]	16000 [7550]
No. Motors/HP	4 at 1/3 HP	4 at 1/3 HP	4 at 1/3 HP	4 at 1/3 HP
Motor RPM	1075	1075	1075	1075
Indoor Fan—Type	FC Centrifugal	FC Centrifugal	FC Centrifugal	FC Centrifugal
No. Used/Diameter in. [mm]	2/18x9 [457x229]	2/18x9 [457x229]	2/18x9 [457x229]	2/18x9 [457x229]
Drive Type	Belt (Adjustable)	Belt (Adjustable)	Belt (Adjustable)	Belt (Adjustable)
No. Speeds (Standard / VFD)	Single / Multiple	Single / Multiple	Single / Multiple	Single / Multiple
No. Motors	1	1	1	1
Motor HP	3	3	5	5
Motor RPM	1725	1725	1725	1725
Motor Frame Size	56	56	184	184
Filter—Type	Disposable	Disposable	Disposable	Disposable
Furnished	Yes	Yes	Yes	Yes
(NO.) Size Recommended in. [mm x mm x mm]	(8)2x25x20 [51x635x508]	(8)2x25x20 [51x635x508]	(8)2x25x20 [51x635x508]	(8)2x25x20 [51x635x508]
Refrigerant Charge Oz. (Sys. 1/Sys. 2) [g]	205/211 [5812/5982]	205/211 [5812/5982]	205/211 [5812/5982]	205/211 [5812/5982]
Weights				
Net Weight lbs. [kg]	1958 [888]	1971 [894]	1987 [901]	2000 [907]
Ship Weight lbs. [kg]	2084 [945]	2097 [951]	2113 [958]	2126 [964]

See Page 24 for Notes.

[ ] Designates Metric Conversions

NOM. SIZES 15-25 TONS [52.8-87.9 kW] MODELS

Model RKNL- Series Model RKNL- Series (with VFD)	C180YL35E	C180YM35E	C210CL25E H210CR25E	C210CL35E H210CR35E
Cooling Performance[1]				CONTINUED →
Gross Cooling Capacity Btu [kW]	188,000 [55.08]	188,000 [55.08]	212,000 [62.12]	212,000 [62.12]
EER/SEER[2]	11.1/NA	11.1/NA	11.6/NA	11.6/NA
Nominal CFM/AHRI Rated CFM [L/s]	6000/5900 [2831/2784]	6000/5900 [2831/2784]	7000/7025 [3303/3315]	7000/7025 [3303/3315]
AHRI Net Cooling Capacity Btu [kW]	182,000 [53.33]	182,000 [53.33]	204,000 [59.77]	204,000 [59.77]
Net Sensible Capacity Btu [kW]	135,700 [39.76]	135,700 [39.76]	154,900 [45.39]	154,900 [45.39]
Net Latent Capacity Btu [kW]	46,300 [13.57]	46,300 [13.57]	49,100 [14.39]	49,100 [14.39]
IEER[3] Latent (Standard / VFD)	12.4	12.4	12.6/14.5	12.6/14.5
Net System Power kW	16.35	16.35	17.57	17.57
Heating Performance (Gas)[4]				
Heating Input Btu [kW] (1st Stage / 2nd Stage)	175,000/350,000 [51.27/102.55]	175,000/350,000 [51.27/102.55]	125,000/250,000 [36.62/73.25]	175,000/350,000 [51.27/102.55]
Heating Output Btu [kW] (1st Stage / 2nd Stage)	141,750/283,500 [41.53/83.06]	141,750/283,500 [41.53/83.06]	101,250/202,500 [29.67/59.33]	141,750/283,500 [41.53/83.06]
Temperature Rise Range °F [°C] (1st Stage / 2nd Stage)	30-60 [16.7-33.3] / 30-60 [16.7-33.3]	30-60 [16.7-33.3] / 30-60 [16.7-33.3]	15-45 [8.3-25] / 15-45 [8.3-25]	25-55 [13.9-30.6] / 25-55 [13.9-30.6]
Steady State Efficiency (%)	81	81	81	81
No. Burners	14	14	10	14
No. Stages	2	2	2	2
Gas Connection Pipe Size in. [mm]	0.75 [19]	0.75 [19]	0.75 [19]	0.75 [19]
Compressor				
No./Type	2/Scroll	2/Scroll	2/Scroll	2/Scroll
Outdoor Sound Rating (dB)[5]	91	91	91	91
Outdoor Coil—Fin Type	Louvered	Louvered	Louvered	Louvered
Tube Type	Rifled	Rifled	Rifled	Rifled
Tube Size in. [mm] OD	0.375 [9.5]	0.375 [9.5]	0.375 [9.5]	0.375 [9.5]
Face Area sq. ft. [sq. m]	53.3 [4.95]	53.3 [4.95]	53.3 [4.95]	53.3 [4.95]
Rows / FPI [FPcm]	1 / 22 [9]	1 / 22 [9]	2 / 18 [7]	2 / 18 [7]
Indoor Coil—Fin Type	Louvered	Louvered	Louvered	Louvered
Tube Type	Rifled	Rifled	Rifled	Rifled
Tube Size in. [mm]	0.375 [9.5]	0.375 [9.5]	0.375 [9.5]	0.375 [9.5]
Face Area sq. ft. [sq. m]	26.67 [2.48]	26.67 [2.48]	26.67 [2.48]	26.67 [2.48]
Rows / FPI [FPcm]	2 / 18 [7]	2 / 18 [7]	2 / 18 [7]	2 / 18 [7]
Refrigerant Control	TX Valves	TX Valves	TX Valves	TX Valves
Drain Connection No./Size in. [mm]	1/1 [25.4]	1/1 [25.4]	1/1 [25.4]	1/1 [25.4]
Outdoor Fan—Type	Propeller	Propeller	Propeller	Propeller
No. Used/Diameter in. [mm]	4/24 [609.6]	4/24 [609.6]	4/24 [609.6]	4/24 [609.6]
Drive Type/No. Speeds	Direct/1	Direct/1	Direct/1	Direct/1
CFM [L/s]	16000 [7550]	16000 [7550]	14800 [6984]	14800 [6984]
No. Motors/HP	4 at 1/3 HP	4 at 1/3 HP	4 at 1/3 HP	4 at 1/3 HP
Motor RPM	1075	1075	1075	1075
Indoor Fan—Type	FC Centrifugal	FC Centrifugal	FC Centrifugal	FC Centrifugal
No. Used/Diameter in. [mm]	2/18x9 [457x229]	2/18x9 [457x229]	2/18x9 [457x229]	2/18x9 [457x229]
Drive Type	Belt (Adjustable)	Belt (Adjustable)	Belt (Adjustable)	Belt (Adjustable)
No. Speeds (Standard / VFD)	Single	Single	Single / Multiple	Single / Multiple
No. Motors	1	1	1	1
Motor HP	3	5	3	3
Motor RPM	1725	1725	1725	1725
Motor Frame Size	56	184	56	56
Filter—Type	Disposable	Disposable	Disposable	Disposable
Furnished	Yes	Yes	Yes	Yes
(NO.) Size Recommended in. [mm x mm x mm]	(8)2x25x20 [51x635x508]	(8)2x25x20 [51x635x508]	(8)2x25x20 [51x635x508]	(8)2x25x20 [51x635x508]
Refrigerant Charge Oz. (Sys. 1/Sys. 2) [g]	205/211 [5812/5982]	205/211 [5812/5982]	294/302 [8335/8562]	294/302 [8335/8562]
Weights				
Net Weight lbs. [kg]	1986 [901]	2015 [914]	2145 [973]	2158 [979]
Ship Weight lbs. [kg]	2112 [958]	2141 [971]	2272 [1031]	2285 [1036]

See Page 24 for Notes.

[ ] Designates Metric Conversions

NOM. SIZES 15-25 TONS [52.8-87.9 kW] MODELS

Model RKNL- Series Model RKNL- Series (with VFD)	C210CM25E H210CS25E	C210CM35E H210CS35E	C210DL25E H210DR25E	C210DL35E H210DR35E
Cooling Performance[1]				CONTINUED →
Gross Cooling Capacity Btu [kW]	212,000 [62.12]	212,000 [62.12]	212,000 [62.12]	212,000 [62.12]
EER/SEER[2]	11.6/NA	11.6/NA	11.6/NA	11.6/NA
Nominal CFM/AHRI Rated CFM [L/s]	7000/7025 [3303/3315]	7000/7025 [3303/3315]	7000/7025 [3303/3315]	7000/7025 [3303/3315]
AHRI Net Cooling Capacity Btu [kW]	204,000 [59.77]	204,000 [59.77]	204,000 [59.77]	204,000 [59.77]
Net Sensible Capacity Btu [kW]	154,900 [45.39]	154,900 [45.39]	154,900 [45.39]	154,900 [45.39]
Net Latent Capacity Btu [kW]	49,100 [14.39]	49,100 [14.39]	49,100 [14.39]	49,100 [14.39]
IEER[3] Latent (Standard / VFD)	12.6/14.5	12.6/14.5	12.6/14.5	12.6/14.5
Net System Power kW	17.57	17.57	17.57	17.57
Heating Performance (Gas)[4]				
Heating Input Btu [kW] (1st Stage / 2nd Stage)	125,000/250,000 [36.62/73.25]	175,000/350,000 [51.27/102.55]	125,000/250,000 [36.62/73.25]	175,000/350,000 [51.27/102.55]
Heating Output Btu [kW] (1st Stage / 2nd Stage)	101,250/202,500 [29.67/59.33]	141,750/283,500 [41.53/83.06]	101,250/202,500 [29.67/59.33]	141,750/283,500 [41.53/83.06]
Temperature Rise Range °F [°C] (1st Stage / 2nd Stage)	15-45 [8.3-25] / 15-45 [8.3-25]	25-55 [13.9-30.6] / 25-55 [13.9-30.6]	15-45 [8.3-25] / 15-45 [8.3-25]	25-55 [13.9-30.6] / 25-55 [13.9-30.6]
Steady State Efficiency (%)	81	81	81	81
No. Burners	10	14	10	14
No. Stages	2	2	2	2
Gas Connection Pipe Size in. [mm]	0.75 [19]	0.75 [19]	0.75 [19]	0.75 [19]
Compressor				
No./Type	2/Scroll	2/Scroll	2/Scroll	2/Scroll
Outdoor Sound Rating (dB)[5]	91	91	91	91
Outdoor Coil—Fin Type	Louvered	Louvered	Louvered	Louvered
Tube Type	Rifled	Rifled	Rifled	Rifled
Tube Size in. [mm] OD	0.375 [9.5]	0.375 [9.5]	0.375 [9.5]	0.375 [9.5]
Face Area sq. ft. [sq. m]	53.3 [4.95]	53.3 [4.95]	53.3 [4.95]	53.3 [4.95]
Rows / FPI [FPcm]	2 / 18 [7]	2 / 18 [7]	2 / 18 [7]	2 / 18 [7]
Indoor Coil—Fin Type	Louvered	Louvered	Louvered	Louvered
Tube Type	Rifled	Rifled	Rifled	Rifled
Tube Size in. [mm]	0.375 [9.5]	0.375 [9.5]	0.375 [9.5]	0.375 [9.5]
Face Area sq. ft. [sq. m]	26.67 [2.48]	26.67 [2.48]	26.67 [2.48]	26.67 [2.48]
Rows / FPI [FPcm]	2 / 18 [7]	2 / 18 [7]	2 / 18 [7]	2 / 18 [7]
Refrigerant Control	TX Valves	TX Valves	TX Valves	TX Valves
Drain Connection No./Size in. [mm]	1/1 [25.4]	1/1 [25.4]	1/1 [25.4]	1/1 [25.4]
Outdoor Fan—Type	Propeller	Propeller	Propeller	Propeller
No. Used/Diameter in. [mm]	4/24 [609.6]	4/24 [609.6]	4/24 [609.6]	4/24 [609.6]
Drive Type/No. Speeds	Direct/1	Direct/1	Direct/1	Direct/1
CFM [L/s]	14800 [6984]	14800 [6984]	14800 [6984]	14800 [6984]
No. Motors/HP	4 at 1/3 HP	4 at 1/3 HP	4 at 1/3 HP	4 at 1/3 HP
Motor RPM	1075	1075	1075	1075
Indoor Fan—Type	FC Centrifugal	FC Centrifugal	FC Centrifugal	FC Centrifugal
No. Used/Diameter in. [mm]	2/18x9 [457x229]	2/18x9 [457x229]	2/18x9 [457x229]	2/18x9 [457x229]
Drive Type	Belt (Adjustable)	Belt (Adjustable)	Belt (Adjustable)	Belt (Adjustable)
No. Speeds (Standard / VFD)	Single / Multiple	Single / Multiple	Single / Multiple	Single / Multiple
No. Motors	1	1	1	1
Motor HP	5	5	3	3
Motor RPM	1725	1725	1725	1725
Motor Frame Size	184	184	56	56
Filter—Type	Disposable	Disposable	Disposable	Disposable
Furnished	Yes	Yes	Yes	Yes
(NO.) Size Recommended in. [mm x mm x mm]	(8)2x25x20 [51x635x508]	(8)2x25x20 [51x635x508]	(8)2x25x20 [51x635x508]	(8)2x25x20 [51x635x508]
Refrigerant Charge Oz. (Sys. 1/Sys. 2) [g]	294/302 [8335/8562]	294/302 [8335/8562]	294/302 [8335/8562]	294/302 [8335/8562]
Weights				
Net Weight lbs. [kg]	2174 [986]	2187 [992]	2145 [973]	2158 [979]
Ship Weight lbs. [kg]	2301 [1044]	2314 [1050]	2272 [1031]	2285 [1036]

See Page 24 for Notes.

[ ] Designates Metric Conversions

NOM. SIZES 15-25 TONS [52.8-87.9 kW] MODELS

Model RKNL- Series Model RKNL- Series (with VFD)	C210DM25E H210DS25E	C210DM35E H210DS35E	C210YL35E	C210YM35E
Cooling Performance[1]				CONTINUED →
Gross Cooling Capacity Btu [kW]	212,000 [62.12]	212,000 [62.12]	212,000 [62.12]	212,000 [62.12]
EER/SEER[2]	11.6/NA	11.6/NA	11.6/NA	11.6/NA
Nominal CFM/AHRI Rated CFM [L/s]	7000/7025 [3303/3315]	7000/7025 [3303/3315]	7000/7025 [3303/3315]	7000/7025 [3303/3315]
AHRI Net Cooling Capacity Btu [kW]	204,000 [59.77]	204,000 [59.77]	204,000 [59.77]	204,000 [59.77]
Net Sensible Capacity Btu [kW]	154,900 [45.39]	154,900 [45.39]	154,900 [45.39]	154,900 [45.39]
Net Latent Capacity Btu [kW]	49,100 [14.39]	49,100 [14.39]	49,100 [14.39]	49,100 [14.39]
IEER[3] Latent (Standard / VFD)	12.6/14.5	12.6/14.5	12.6	12.6
Net System Power kW	17.57	17.57	17.57	17.57
Heating Performance (Gas)[4]				
Heating Input Btu [kW] (1st Stage / 2nd Stage)	125,000/250,000 [36.62/73.25]	175,000/350,000 [51.27/102.55]	175,000/350,000 [51.27/102.55]	175,000/350,000 [51.27/102.55]
Heating Output Btu [kW] (1st Stage / 2nd Stage)	101,250/202,500 [29.67/59.33]	141,750/283,500 [41.53/83.06]	141,750/283,500 [41.53/83.06]	141,750/283,500 [41.53/83.06]
Temperature Rise Range °F [°C] (1st Stage / 2nd Stage)	15-45 [8.3-25] / 15-45 [8.3-25]	25-55 [13.9-30.6] / 25-55 [13.9-30.6]	25-55 [13.9-30.6] / 25-55 [13.9-30.6]	25-55 [13.9-30.6] / 25-55 [13.9-30.6]
Steady State Efficiency (%)	81	81	81	81
No. Burners	10	14	14	14
No. Stages	2	2	2	2
Gas Connection Pipe Size in. [mm]	0.75 [19]	0.75 [19]	0.75 [19]	0.75 [19]
Compressor				
No./Type	2/Scroll	2/Scroll	2/Scroll	2/Scroll
Outdoor Sound Rating (dB)[5]	91	91	91	91
Outdoor Coil—Fin Type	Louvered	Louvered	Louvered	Louvered
Tube Type	Rifled	Rifled	Rifled	Rifled
Tube Size in. [mm] OD	0.375 [9.5]	0.375 [9.5]	0.375 [9.5]	0.375 [9.5]
Face Area sq. ft. [sq. m]	53.3 [4.95]	53.3 [4.95]	53.3 [4.95]	53.3 [4.95]
Rows / FPI [FPcm]	2 / 18 [7]	2 / 18 [7]	2 / 18 [7]	2 / 18 [7]
Indoor Coil—Fin Type	Louvered	Louvered	Louvered	Louvered
Tube Type	Rifled	Rifled	Rifled	Rifled
Tube Size in. [mm]	0.375 [9.5]	0.375 [9.5]	0.375 [9.5]	0.375 [9.5]
Face Area sq. ft. [sq. m]	26.67 [2.48]	26.67 [2.48]	26.67 [2.48]	26.67 [2.48]
Rows / FPI [FPcm]	2 / 18 [7]	2 / 18 [7]	2 / 18 [7]	2 / 18 [7]
Refrigerant Control	TX Valves	TX Valves	TX Valves	TX Valves
Drain Connection No./Size in. [mm]	1/1 [25.4]	1/1 [25.4]	1/1 [25.4]	1/1 [25.4]
Outdoor Fan—Type	Propeller	Propeller	Propeller	Propeller
No. Used/Diameter in. [mm]	4/24 [609.6]	4/24 [609.6]	4/24 [609.6]	4/24 [609.6]
Drive Type/No. Speeds	Direct/1	Direct/1	Direct/1	Direct/1
CFM [L/s]	14800 [6984]	14800 [6984]	14800 [6984]	14800 [6984]
No. Motors/HP	4 at 1/3 HP	4 at 1/3 HP	4 at 1/3 HP	4 at 1/3 HP
Motor RPM	1075	1075	1075	1075
Indoor Fan—Type	FC Centrifugal	FC Centrifugal	FC Centrifugal	FC Centrifugal
No. Used/Diameter in. [mm]	2/18x9 [457x229]	2/18x9 [457x229]	2/18x9 [457x229]	2/18x9 [457x229]
Drive Type	Belt (Adjustable)	Belt (Adjustable)	Belt (Adjustable)	Belt (Adjustable)
No. Speeds (Standard / VFD)	Single / Multiple	Single / Multiple	Single	Single
No. Motors	1	1	1	1
Motor HP	5	5	3	5
Motor RPM	1725	1725	1725	1725
Motor Frame Size	184	184	56	184
Filter—Type	Disposable	Disposable	Disposable	Disposable
Furnished	Yes	Yes	Yes	Yes
(NO.) Size Recommended in. [mm x mm x mm]	(8)2x25x20 [51x635x508]	(8)2x25x20 [51x635x508]	(8)2x25x20 [51x635x508]	(8)2x25x20 [51x635x508]
Refrigerant Charge Oz. (Sys. 1/Sys. 2) [g]	294/302 [8335/8562]	294/302 [8335/8562]	294/302 [8335/8562]	294/302 [8335/8562]
Weights				
Net Weight lbs. [kg]	2174 [986]	2187 [992]	2173 [986]	2202 [999]
Ship Weight lbs. [kg]	2301 [1044]	2314 [1050]	2300 [1043]	2329 [1056]

See Page 24 for Notes.

[ ] Designates Metric Conversions

NOM. SIZES 15-25 TONS [52.8-87.9 kW] MODELS

Model RKNL- Series Model RKNL- Series (with VFD)	C240CL30E H240CR30E	C240CL40E H240CR40E	C240CM30E H240CS30E	C240CM40E H240CS40E
Cooling Performance[1]				CONTINUED →
Gross Cooling Capacity Btu [kW]	244,000 [71.49]	244,000 [71.49]	244,000 [71.49]	244,000 [71.49]
EER/SEER[2]	11.1/NA	11.1/NA	11.1/NA	11.1/NA
Nominal CFM/AHRI Rated CFM [L/s]	8000/7725 [3775/3645]	8000/7725 [3775/3645]	8000/7725 [3775/3645]	8000/7725 [3775/3645]
AHRI Net Cooling Capacity Btu [kW]	234,000 [68.56]	234,000 [68.56]	234,000 [68.56]	234,000 [68.56]
Net Sensible Capacity Btu [kW]	171,600 [50.28]	171,600 [50.28]	171,600 [50.28]	171,600 [50.28]
Net Latent Capacity Btu [kW]	62,400 [18.28]	62,400 [18.28]	62,400 [18.28]	62,400 [18.28]
IEER[3] Latent (Standard / VFD)	11.4/14.8	11.4/14.8	11.4/14.8	11.4/14.8
Net System Power kW	21.04	21.04	21.04	21.04
Heating Performance (Gas)[4]				
Heating Input Btu [kW] (1st Stage / 2nd Stage)	150,000/300,000 [43.95/87.9]	200,000/400,000 [58.6/117.2]	150,000/300,000 [43.95/87.9]	200,000/400,000 [58.6/117.2]
Heating Output Btu [kW] (1st Stage / 2nd Stage)	121,500/243,000 [35.6/71.2]	162,000/324,000 [47.47/94.93]	121,500/243,000 [35.6/71.2]	162,000/324,000 [47.47/94.93]
Temperature Rise Range °F [°C] (1st Stage / 2nd Stage)	15-45 [8.3-25] / 15-45 [8.3-25]	25-55 [13.9-30.6] / 25-55 [13.9-30.6]	15-45 [8.3-25] / 15-45 [8.3-25]	25-55 [13.9-30.6] / 25-55 [13.9-30.6]
Steady State Efficiency (%)	81	81	81	81
No. Burners	12	14	12	14
No. Stages	2	2	2	2
Gas Connection Pipe Size in. [mm]	0.75 [19]	0.75 [19]	0.75 [19]	0.75 [19]
Compressor				
No./Type	2/Scroll	2/Scroll	2/Scroll	2/Scroll
Outdoor Sound Rating (dB)[5]	91	91	91	91
Outdoor Coil—Fin Type	Louvered	Louvered	Louvered	Louvered
Tube Type	Rifled	Rifled	Rifled	Rifled
Tube Size in. [mm] OD	0.375 [9.5]	0.375 [9.5]	0.375 [9.5]	0.375 [9.5]
Face Area sq. ft. [sq. m]	53.3 [4.95]	53.3 [4.95]	53.3 [4.95]	53.3 [4.95]
Rows / FPI [FPcm]	2 / 22 [9]	2 / 22 [9]	2 / 22 [9]	2 / 22 [9]
Indoor Coil—Fin Type	Louvered	Louvered	Louvered	Louvered
Tube Type	Rifled	Rifled	Rifled	Rifled
Tube Size in. [mm]	0.375 [9.5]	0.375 [9.5]	0.375 [9.5]	0.375 [9.5]
Face Area sq. ft. [sq. m]	26.67 [2.48]	26.67 [2.48]	26.67 [2.48]	26.67 [2.48]
Rows / FPI [FPcm]	3 / 13 [5]	3 / 13 [5]	3 / 13 [5]	3 / 13 [5]
Refrigerant Control	TX Valves	TX Valves	TX Valves	TX Valves
Drain Connection No./Size in. [mm]	1/1 [25.4]	1/1 [25.4]	1/1 [25.4]	1/1 [25.4]
Outdoor Fan—Type	Propeller	Propeller	Propeller	Propeller
No. Used/Diameter in. [mm]	6/24 [609.6]	6/24 [609.6]	6/24 [609.6]	6/24 [609.6]
Drive Type/No. Speeds	Direct/1	Direct/1	Direct/1	Direct/1
CFM [L/s]	19800 [9344]	19800 [9344]	19800 [9344]	19800 [9344]
No. Motors/HP	6 at 1/3 HP	6 at 1/3 HP	6 at 1/3 HP	6 at 1/3 HP
Motor RPM	1075	1075	1075	1075
Indoor Fan—Type	FC Centrifugal	FC Centrifugal	FC Centrifugal	FC Centrifugal
No. Used/Diameter in. [mm]	2/18x9 [457x229]	2/18x9 [457x229]	2/18x9 [457x229]	2/18x9 [457x229]
Drive Type	Belt (Adjustable)	Belt (Adjustable)	Belt (Adjustable)	Belt (Adjustable)
No. Speeds (Standard / VFD)	Single / Multiple	Single / Multiple	Single / Multiple	Single / Multiple
No. Motors	1	1	1	1
Motor HP	5	5	7 1/2	7 1/2
Motor RPM	1725	1725	1725	1725
Motor Frame Size	184	184	213	213
Filter—Type	Disposable	Disposable	Disposable	Disposable
Furnished	Yes	Yes	Yes	Yes
(NO.) Size Recommended in. [mm x mm x mm]	(8)2x25x20 [51x635x508]	(8)2x25x20 [51x635x508]	(8)2x25x20 [51x635x508]	(8)2x25x20 [51x635x508]
Refrigerant Charge Oz. (Sys. 1/Sys. 2) [g]	402/331 [11397/9384]	402/331 [11397/9384]	402/331 [11397/9384]	402/331 [11397/9384]
Weights				
Net Weight lbs. [kg]	2289 [1038]	2303 [1045]	2327 [1056]	2341 [1062]
Ship Weight lbs. [kg]	2415 [1095]	2430 [1102]	2453 [1113]	2468 [1119]

See Page 24 for Notes.

[ ] Designates Metric Conversions

NOM. SIZES 15-25 TONS [52.8-87.9 kW] MODELS

Model RKNL- Series Model RKNL- Series (with VFD)	C240CN30E H240CT30E	C240CN40E H240CT40E	C240DL30E H240DR30E	C240DL40E H240DR40E
Cooling Performance[1]				CONTINUED →
Gross Cooling Capacity Btu [kW]	244,000 [71.49]	244,000 [71.49]	244,000 [71.49]	244,000 [71.49]
EER/SEER[2]	11.1/NA	11.1/NA	11.1/NA	11.1/NA
Nominal CFM/AHRI Rated CFM [L/s]	8000/7725 [3775/3645]	8000/7725 [3775/3645]	8000/7725 [3775/3645]	8000/7725 [3775/3645]
AHRI Net Cooling Capacity Btu [kW]	234,000 [68.56]	234,000 [68.56]	234,000 [68.56]	234,000 [68.56]
Net Sensible Capacity Btu [kW]	171,600 [50.28]	171,600 [50.28]	171,600 [50.28]	171,600 [50.28]
Net Latent Capacity Btu [kW]	62,400 [18.28]	62,400 [18.28]	62,400 [18.28]	62,400 [18.28]
IEER[3] Latent (Standard / VFD)	11.4/14.8	11.4/14.8	11.4/14.8	11.4/14.8
Net System Power kW	21.04	21.04	21.04	21.04
Heating Performance (Gas)[4]				
Heating Input Btu [kW] (1st Stage / 2nd Stage)	150,000/300,000 [43.95/87.9]	200,000/400,000 [58.6/117.2]	150,000/300,000 [43.95/87.9]	200,000/400,000 [58.6/117.2]
Heating Output Btu [kW] (1st Stage / 2nd Stage)	121,500/243,000 [35.6/71.2]	162,000/324,000 [47.47/94.93]	121,500/243,000 [35.6/71.2]	162,000/324,000 [47.47/94.93]
Temperature Rise Range °F [°C] (1st Stage / 2nd Stage)	15-45 [8.3-25] / 15-45 [8.3-25]	25-55 [13.9-30.6] / 25-55 [13.9-30.6]	15-45 [8.3-25] / 15-45 [8.3-25]	25-55 [13.9-30.6] / 25-55 [13.9-30.6]
Steady State Efficiency (%)	81	81	81	81
No. Burners	12	14	12	14
No. Stages	2	2	2	2
Gas Connection Pipe Size in. [mm]	0.75 [19]	0.75 [19]	0.75 [19]	0.75 [19]
Compressor				
No./Type	2/Scroll	2/Scroll	2/Scroll	2/Scroll
Outdoor Sound Rating (dB)[5]	91	91	91	91
Outdoor Coil—Fin Type	Louvered	Louvered	Louvered	Louvered
Tube Type	Rifled	Rifled	Rifled	Rifled
Tube Size in. [mm] OD	0.375 [9.5]	0.375 [9.5]	0.375 [9.5]	0.375 [9.5]
Face Area sq. ft. [sq. m]	53.3 [4.95]	53.3 [4.95]	53.3 [4.95]	53.3 [4.95]
Rows / FPI [FPcm]	2 / 22 [9]	2 / 22 [9]	2 / 22 [9]	2 / 22 [9]
Indoor Coil—Fin Type	Louvered	Louvered	Louvered	Louvered
Tube Type	Rifled	Rifled	Rifled	Rifled
Tube Size in. [mm]	0.375 [9.5]	0.375 [9.5]	0.375 [9.5]	0.375 [9.5]
Face Area sq. ft. [sq. m]	26.67 [2.48]	26.67 [2.48]	26.67 [2.48]	26.67 [2.48]
Rows / FPI [FPcm]	3 / 13 [5]	3 / 13 [5]	3 / 13 [5]	3 / 13 [5]
Refrigerant Control	TX Valves	TX Valves	TX Valves	TX Valves
Drain Connection No./Size in. [mm]	1/1 [25.4]	1/1 [25.4]	1/1 [25.4]	1/1 [25.4]
Outdoor Fan—Type	Propeller	Propeller	Propeller	Propeller
No. Used/Diameter in. [mm]	6/24 [609.6]	6/24 [609.6]	6/24 [609.6]	6/24 [609.6]
Drive Type/No. Speeds	Direct/1	Direct/1	Direct/1	Direct/1
CFM [L/s]	19800 [9344]	19800 [9344]	19800 [9344]	19800 [9344]
No. Motors/HP	6 at 1/3 HP	6 at 1/3 HP	6 at 1/3 HP	6 at 1/3 HP
Motor RPM	1075	1075	1075	1075
Indoor Fan—Type	FC Centrifugal	FC Centrifugal	FC Centrifugal	FC Centrifugal
No. Used/Diameter in. [mm]	2/18x9 [457x229]	2/18x9 [457x229]	2/18x9 [457x229]	2/18x9 [457x229]
Drive Type	Belt (Adjustable)	Belt (Adjustable)	Belt (Adjustable)	Belt (Adjustable)
No. Speeds (Standard / VFD)	Single / Multiple	Single / Multiple	Single / Multiple	Single / Multiple
No. Motors	1	1	1	1
Motor HP	7 1/2	7 1/2	5	5
Motor RPM	1725	1725	1725	1725
Motor Frame Size	213	213	184	184
Filter—Type	Disposable	Disposable	Disposable	Disposable
Furnished	Yes	Yes	Yes	Yes
(NO.) Size Recommended in. [mm x mm x mm]	(8)2x25x20 [51x635x508]	(8)2x25x20 [51x635x508]	(8)2x25x20 [51x635x508]	(8)2x25x20 [51x635x508]
Refrigerant Charge Oz. (Sys. 1/Sys. 2) [g]	402/331 [11397/9384]	402/331 [11397/9384]	402/331 [11397/9384]	402/331 [11397/9384]
Weights				
Net Weight lbs. [kg]	2325 [1055]	2340 [1061]	2289 [1038]	2303 [1045]
Ship Weight lbs. [kg]	2452 [1112]	2466 [1119]	2415 [1095]	2430 [1102]

See Page 24 for Notes.

[ ] Designates Metric Conversions

NOM. SIZES 15-25 TONS [52.8-87.9 kW] MODELS

Model RKNL- Series Model RKNL- Series (with VFD)	C240DM30E H240DS30E	C240DM40E H240DS40E	C240DN30E H240DT30E	C240DN40E H240DT40E
Cooling Performance[1]				CONTINUED →
Gross Cooling Capacity Btu [kW]	244,000 [71.49]	244,000 [71.49]	244,000 [71.49]	244,000 [71.49]
EER/SEER[2]	11.1/NA	11.1/NA	11.1/NA	11.1/NA
Nominal CFM/AHRI Rated CFM [L/s]	8000/7725 [3775/3645]	8000/7725 [3775/3645]	8000/7725 [3775/3645]	8000/7725 [3775/3645]
AHRI Net Cooling Capacity Btu [kW]	234,000 [68.56]	234,000 [68.56]	234,000 [68.56]	234,000 [68.56]
Net Sensible Capacity Btu [kW]	171,600 [50.28]	171,600 [50.28]	171,600 [50.28]	171,600 [50.28]
Net Latent Capacity Btu [kW]	62,400 [18.28]	62,400 [18.28]	62,400 [18.28]	62,400 [18.28]
IEER[3] Latent (Standard / VFD)	11.4/14.8	11.4/14.8	11.4/14.8	11.4/14.8
Net System Power kW	21.04	21.04	21.04	21.04
Heating Performance (Gas)[4]				
Heating Input Btu [kW] (1st Stage / 2nd Stage)	150,000/300,000 [43.95/87.9]	200,000/400,000 [58.6/117.2]	150,000/300,000 [43.95/87.9]	200,000/400,000 [58.6/117.2]
Heating Output Btu [kW] (1st Stage / 2nd Stage)	121,500/243,000 [35.6/71.2]	162,000/324,000 [47.47/94.93]	121,500/243,000 [35.6/71.2]	162,000/324,000 [47.47/94.93]
Temperature Rise Range °F [°C] (1st Stage / 2nd Stage)	15-45 [8.3-25] / 15-45 [8.3-25]	25-55 [13.9-30.6] / 25-55 [13.9-30.6]	15-45 [8.3-25] / 15-45 [8.3-25]	25-55 [13.9-30.6] / 25-55 [13.9-30.6]
Steady State Efficiency (%)	81	81	81	81
No. Burners	12	14	12	14
No. Stages	2	2	2	2
Gas Connection Pipe Size in. [mm]	0.75 [19]	0.75 [19]	0.75 [19]	0.75 [19]
Compressor				
No./Type	2/Scroll	2/Scroll	2/Scroll	2/Scroll
Outdoor Sound Rating (dB)[5]	91	91	91	91
Outdoor Coil—Fin Type	Louvered	Louvered	Louvered	Louvered
Tube Type	Rifled	Rifled	Rifled	Rifled
Tube Size in. [mm] OD	0.375 [9.5]	0.375 [9.5]	0.375 [9.5]	0.375 [9.5]
Face Area sq. ft. [sq. m]	53.3 [4.95]	53.3 [4.95]	53.3 [4.95]	53.3 [4.95]
Rows / FPI [FPcm]	2 / 22 [9]	2 / 22 [9]	2 / 22 [9]	2 / 22 [9]
Indoor Coil—Fin Type	Louvered	Louvered	Louvered	Louvered
Tube Type	Rifled	Rifled	Rifled	Rifled
Tube Size in. [mm]	0.375 [9.5]	0.375 [9.5]	0.375 [9.5]	0.375 [9.5]
Face Area sq. ft. [sq. m]	26.67 [2.48]	26.67 [2.48]	26.67 [2.48]	26.67 [2.48]
Rows / FPI [FPcm]	3 / 13 [5]	3 / 13 [5]	3 / 13 [5]	3 / 13 [5]
Refrigerant Control	TX Valves	TX Valves	TX Valves	TX Valves
Drain Connection No./Size in. [mm]	1/1 [25.4]	1/1 [25.4]	1/1 [25.4]	1/1 [25.4]
Outdoor Fan—Type	Propeller	Propeller	Propeller	Propeller
No. Used/Diameter in. [mm]	6/24 [609.6]	6/24 [609.6]	6/24 [609.6]	6/24 [609.6]
Drive Type/No. Speeds	Direct/1	Direct/1	Direct/1	Direct/1
CFM [L/s]	19800 [9344]	19800 [9344]	19800 [9344]	19800 [9344]
No. Motors/HP	6 at 1/3 HP	6 at 1/3 HP	6 at 1/3 HP	6 at 1/3 HP
Motor RPM	1075	1075	1075	1075
Indoor Fan—Type	FC Centrifugal	FC Centrifugal	FC Centrifugal	FC Centrifugal
No. Used/Diameter in. [mm]	2/18x9 [457x229]	2/18x9 [457x229]	2/18x9 [457x229]	2/18x9 [457x229]
Drive Type	Belt (Adjustable)	Belt (Adjustable)	Belt (Adjustable)	Belt (Adjustable)
No. Speeds (Standard / VFD)	Single / Multiple	Single / Multiple	Single / Multiple	Single / Multiple
No. Motors	1	1	1	1
Motor HP	7 1/2	7 1/2	7 1/2	7 1/2
Motor RPM	1725	1725	1725	1725
Motor Frame Size	184	213	184	213
Filter—Type	Disposable	Disposable	Disposable	Disposable
Furnished	Yes	Yes	Yes	Yes
(NO.) Size Recommended in. [mm x mm x mm]	(8)2x25x20 [51x635x508]	(8)2x25x20 [51x635x508]	(8)2x25x20 [51x635x508]	(8)2x25x20 [51x635x508]
Refrigerant Charge Oz. (Sys. 1/Sys. 2) [g]	402/331 [11397/9384]	402/331 [11397/9384]	402/331 [11397/9384]	402/331 [11397/9384]
Weights				
Net Weight lbs. [kg]	2327 [1056]	2341 [1062]	2325 [1055]	2340 [1061]
Ship Weight lbs. [kg]	2453 [1113]	2468 [1119]	2452 [1112]	2466 [1119]

See Page 24 for Notes.

[ ] Designates Metric Conversions

NOM. SIZES 15-25 TONS [52.8-87.9 kW] MODELS

Model RKNL- Series Model RKNL- Series (with VFD)	C240YL40E	C240YM40E	C240YN40E	C300CL30E H300CR30E
Cooling Performance[1]				CONTINUED →
Gross Cooling Capacity Btu [kW]	244,000 [71.49]	244,000 [71.49]	244,000 [71.49]	312,000 [91.42]
EER/SEER[2]	11.1/NA	11.1/NA	11.1/NA	10/NA
Nominal CFM/AHRI Rated CFM [L/s]	8000/7725 [3775/3645]	8000/7725 [3775/3645]	8000/7725 [3775/3645]	10000/9475 [4719/4471]
AHRI Net Cooling Capacity Btu [kW]	234,000 [68.56]	234,000 [68.56]	234,000 [68.56]	294,000 [86.14]
Net Sensible Capacity Btu [kW]	171,600 [50.28]	171,600 [50.28]	171,600 [50.28]	214,100 [62.73]
Net Latent Capacity Btu [kW]	62,400 [18.28]	62,400 [18.28]	62,400 [18.28]	79,900 [23.41]
IEER[3] Latent (Standard / VFD)	11.4	11.4	11.4	10.1/13.4
Net System Power kW	21.04	21.04	21.04	29.39
Heating Performance (Gas)[4]				
Heating Input Btu [kW] (1st Stage / 2nd Stage)	200,000/400,000 [58.6/117.2]	200,000/400,000 [58.6/117.2]	200,000/400,000 [58.6/117.2]	150,000/300,000 [43.95/87.9]
Heating Output Btu [kW] (1st Stage / 2nd Stage)	162,000/324,000 [47.47/94.93]	162,000/324,000 [47.47/94.93]	162,000/324,000 [47.47/94.93]	121,500/243,000 [35.6/71.2]
Temperature Rise Range °F [°C] (1st Stage / 2nd Stage)	25-55 [13.9-30.6] / 25-55 [13.9-30.6]	25-55 [13.9-30.6] / 25-55 [13.9-30.6]	25-55 [13.9-30.6] / 25-55 [13.9-30.6]	10-40 [5.6-22.2] / 10-40 [5.6-22.2]
Steady State Efficiency (%)	81	81	81	81
No. Burners	14	14	14	12
No. Stages	2	2	2	2
Gas Connection Pipe Size in. [mm]	0.75 [19]	0.75 [19]	0.75 [19]	0.75 [19]
Compressor				
No./Type	2/Scroll	2/Scroll	2/Scroll	2/Scroll
Outdoor Sound Rating (dB)[5]	91	91	91	92
Outdoor Coil—Fin Type	Louvered	Louvered	Louvered	Louvered
Tube Type	Rifled	Rifled	Rifled	Rifled
Tube Size in. [mm] OD	0.375 [9.5]	0.375 [9.5]	0.375 [9.5]	0.375 [9.5]
Face Area sq. ft. [sq. m]	53.3 [4.95]	53.3 [4.95]	53.3 [4.95]	53.3 [4.95]
Rows / FPI [FPcm]	2 / 22 [9]	2 / 22 [9]	2 / 22 [9]	2 / 22 [9]
Indoor Coil—Fin Type	Louvered	Louvered	Louvered	Louvered
Tube Type	Rifled	Rifled	Rifled	Rifled
Tube Size in. [mm]	0.375 [9.5]	0.375 [9.5]	0.375 [9.5]	0.375 [9.5]
Face Area sq. ft. [sq. m]	26.67 [2.48]	26.67 [2.48]	26.67 [2.48]	26.67 [2.48]
Rows / FPI [FPcm]	3 / 13 [5]	3 / 13 [5]	3 / 13 [5]	4 / 15 [6]
Refrigerant Control	TX Valves	TX Valves	TX Valves	TX Valves
Drain Connection No./Size in. [mm]	1/1 [25.4]	1/1 [25.4]	1/1 [25.4]	1/1 [25.4]
Outdoor Fan—Type	Propeller	Propeller	Propeller	Propeller
No. Used/Diameter in. [mm]	6/24 [609.6]	6/24 [609.6]	6/24 [609.6]	6/24 [609.6]
Drive Type/No. Speeds	Direct/1	Direct/1	Direct/1	Direct/1
CFM [L/s]	19800 [9344]	19800 [9344]	19800 [9344]	19800 [9344]
No. Motors/HP	6 at 1/3 HP	6 at 1/3 HP	6 at 1/3 HP	6 at 1/3 HP
Motor RPM	1075	1075	1075	1075
Indoor Fan—Type	FC Centrifugal	FC Centrifugal	FC Centrifugal	FC Centrifugal
No. Used/Diameter in. [mm]	2/18x9 [457x229]	2/18x9 [457x229]	2/18x9 [457x229]	2/18x9 [457x229]
Drive Type	Belt (Adjustable)	Belt (Adjustable)	Belt (Adjustable)	Belt (Adjustable)
No. Speeds (Standard / VFD)	Single	Single	Single	Single / Multiple
No. Motors	1	1	1	1
Motor HP	5	7 1/2	7 1/2	7 1/2
Motor RPM	1725	1725	1725	1725
Motor Frame Size	184	213	213	213
Filter—Type	Disposable	Disposable	Disposable	Disposable
Furnished	Yes	Yes	Yes	Yes
(NO.) Size Recommended in. [mm x mm x mm]	(8)2x25x20 [51x635x508]	(8)2x25x20 [51x635x508]	(8)2x25x20 [51x635x508]	(8)2x25x20 [51x635x508]
Refrigerant Charge Oz. (Sys. 1/Sys. 2) [g]	402/331 [11397/9384]	402/331 [11397/9384]	402/331 [11397/9384]	339/357 [9611/10121]
Weights				
Net Weight lbs. [kg]	2323 [1054]	2361 [1071]	2360 [1070]	2388 [1083]
Ship Weight lbs. [kg]	2450 [1111]	2488 [1129]	2486 [1128]	2514 [1140]

See Page 24 for Notes.

[ ] Designates Metric Conversions

NOM. SIZES 15-25 TONS [52.8-87.9 kW] MODELS

Model RKNL- Series Model RKNL- Series (with VFD)	C300CL40E H300CR40E	C300CM30E H300CS30E	C300CM40E H300CS40E	C300DL30E H300DR30E
Cooling Performance[1]				CONTINUED →
Gross Cooling Capacity Btu [kW]	312,000 [91.42]	312,000 [91.42]	312,000 [91.42]	312,000 [91.42]
EER/SEER[2]	10/NA	10/NA	10/NA	10/NA
Nominal CFM/AHRI Rated CFM [L/s]	10000/9475 [4719/4471]	10000/9475 [4719/4471]	10000/9475 [4719/4471]	10000/9475 [4719/4471]
AHRI Net Cooling Capacity Btu [kW]	294,000 [86.14]	294,000 [86.14]	294,000 [86.14]	294,000 [86.14]
Net Sensible Capacity Btu [kW]	214,100 [62.73]	214,100 [62.73]	214,100 [62.73]	214,100 [62.73]
Net Latent Capacity Btu [kW]	79,900 [23.41]	79,900 [23.41]	79,900 [23.41]	79,900 [23.41]
IEER[3] Latent (Standard / VFD)	10.1/13.4	10.1/13.4	10.1/13.4	10.1/13.4
Net System Power kW	29.39	29.39	29.39	29.39
Heating Performance (Gas)[4]				
Heating Input Btu [kW] (1st Stage / 2nd Stage)	200,000/400,000 [58.6/117.2]	150,000/300,000 [43.95/87.9]	200,000/400,000 [58.6/117.2]	150,000/300,000 [43.95/87.9]
Heating Output Btu [kW] (1st Stage / 2nd Stage)	162,000/324,000 [47.47/94.93]	121,500/243,000 [35.6/71.2]	162,000/324,000 [47.47/94.93]	121,500/243,000 [35.6/71.2]
Temperature Rise Range °F [°C] (1st Stage / 2nd Stage)	15-45 [8.3-25] / 15-45 [8.3-25]	10-40 [5.6-22.2] / 10-40 [5.6-22.2]	25-45 [13.9-25] / 15-45 [8.3-25]	10-40 [5.6-22.2] / 10-40 [5.6-22.2]
Steady State Efficiency (%)	81	81	81	81
No. Burners	14	12	14	12
No. Stages	2	2	2	2
Gas Connection Pipe Size in. [mm]	0.75 [19]	0.75 [19]	0.75 [19]	0.75 [19]
Compressor				
No./Type	2/Scroll	2/Scroll	2/Scroll	2/Scroll
Outdoor Sound Rating (dB)[5]	92	92	92	92
Outdoor Coil—Fin Type	Louvered	Louvered	Louvered	Louvered
Tube Type	Rifled	Rifled	Rifled	Rifled
Tube Size in. [mm] OD	0.375 [9.5]	0.375 [9.5]	0.375 [9.5]	0.375 [9.5]
Face Area sq. ft. [sq. m]	53.3 [4.95]	53.3 [4.95]	53.3 [4.95]	53.3 [4.95]
Rows / FPI [FPcm]	2 / 22 [9]	2 / 22 [9]	2 / 22 [9]	2 / 22 [9]
Indoor Coil—Fin Type	Louvered	Louvered	Louvered	Louvered
Tube Type	Rifled	Rifled	Rifled	Rifled
Tube Size in. [mm]	0.375 [9.5]	0.375 [9.5]	0.375 [9.5]	0.375 [9.5]
Face Area sq. ft. [sq. m]	26.67 [2.48]	26.67 [2.48]	26.67 [2.48]	26.67 [2.48]
Rows / FPI [FPcm]	4 / 15 [6]	4 / 15 [6]	4 / 15 [6]	4 / 15 [6]
Refrigerant Control	TX Valves	TX Valves	TX Valves	TX Valves
Drain Connection No./Size in. [mm]	1/1 [25.4]	1/1 [25.4]	1/1 [25.4]	1/1 [25.4]
Outdoor Fan—Type	Propeller	Propeller	Propeller	Propeller
No. Used/Diameter in. [mm]	6/24 [609.6]	6/24 [609.6]	6/24 [609.6]	6/24 [609.6]
Drive Type/No. Speeds	Direct/1	Direct/1	Direct/1	Direct/1
CFM [L/s]	19800 [9344]	19800 [9344]	19800 [9344]	19800 [9344]
No. Motors/HP	6 at 1/3 HP	6 at 1/3 HP	6 at 1/3 HP	6 at 1/3 HP
Motor RPM	1075	1075	1075	1075
Indoor Fan—Type	FC Centrifugal	FC Centrifugal	FC Centrifugal	FC Centrifugal
No. Used/Diameter in. [mm]	2/18x9 [457x229]	2/18x9 [457x229]	2/18x9 [457x229]	2/18x9 [457x229]
Drive Type	Belt (Adjustable)	Belt (Adjustable)	Belt (Adjustable)	Belt (Adjustable)
No. Speeds (Standard / VFD)	Single / Multiple	Single / Multiple	Single / Multiple	Single / Multiple
No. Motors	1	1	1	1
Motor HP	7 1/2	10	10	7 1/2
Motor RPM	1725	1725	1725	1725
Motor Frame Size	213	215	215	213
Filter—Type	Disposable	Disposable	Disposable	Disposable
Furnished	Yes	Yes	Yes	Yes
(NO.) Size Recommended in. [mm x mm x mm]	(8)2x25x20 [51x635x508]	(8)2x25x20 [51x635x508]	(8)2x25x20 [51x635x508]	(8)2x25x20 [51x635x508]
Refrigerant Charge Oz. (Sys. 1/Sys. 2) [g]	339/357 [9611/10121]	339/357 [9611/10121]	339/357 [9611/10121]	339/357 [9611/10121]
Weights				
Net Weight lbs. [kg]	2402 [1090]	2399 [1088]	2413 [1095]	2388 [1083]
Ship Weight lbs. [kg]	2529 [1147]	2525 [1145]	2540 [1152]	2514 [1140]

See Page 24 for Notes.

[ ] Designates Metric Conversions

NOM. SIZES 15-25 TONS [52.8-87.9 kW] MODELS

Model RKNL- Series Model RKNL- Series (with VFD)	C300DL40E H300DR40E	C300DM30E H300DS30E	C300DM40E H300DS40E	C300YL40E
Cooling Performance[1]				CONTINUED →
Gross Cooling Capacity Btu [kW]	312,000 [91.42]	312,000 [91.42]	312,000 [91.42]	312,000 [91.42]
EER/SEER[2]	10/NA	10/NA	10/NA	10/NA
Nominal CFM/AHRI Rated CFM [L/s]	10000/9475 [4719/4471]	10000/9475 [4719/4471]	10000/9475 [4719/4471]	10000/9475 [4719/4471]
AHRI Net Cooling Capacity Btu [kW]	294,000 [86.14]	294,000 [86.14]	294,000 [86.14]	294,000 [86.14]
Net Sensible Capacity Btu [kW]	214,100 [62.73]	214,100 [62.73]	214,100 [62.73]	214,100 [62.73]
Net Latent Capacity Btu [kW]	79,900 [23.41]	79,900 [23.41]	79,900 [23.41]	79,900 [23.41]
IEER[3] Latent (Standard / VFD)	10.1/13.4	10.1/13.4	10.1/13.4	10.1
Net System Power kW	29.39	29.39	29.39	29.39
Heating Performance (Gas)[4]				
Heating Input Btu [kW] (1st Stage / 2nd Stage)	200,000/400,000 [58.6/117.2]	150,000/300,000 [43.95/87.9]	200,000/400,000 [58.6/117.2]	200,000/400,000 [58.6/117.2]
Heating Output Btu [kW] (1st Stage / 2nd Stage)	162,000/324,000 [47.47/94.93]	121,500/243,000 [35.6/71.2]	162,000/324,000 [47.47/94.93]	162,000/324,000 [47.47/94.93]
Temperature Rise Range °F [°C] (1st Stage / 2nd Stage)	15-45 [8.3-25] / 15-45 [8.3-25]	10-40 [5.6-22.2] / 10-40 [5.6-22.2]	15-45 [8.3-25] / 15-45 [8.3-25]	15-45 [8.3-25] / 15-45 [8.3-25]
Steady State Efficiency (%)	81	81	81	81
No. Burners	14	12	14	14
No. Stages	2	2	2	2
Gas Connection Pipe Size in. [mm]	0.75 [19]	0.75 [19]	0.75 [19]	0.75 [19]
Compressor				
No./Type	2/Scroll	2/Scroll	2/Scroll	2/Scroll
Outdoor Sound Rating (dB)[5]	92	92	92	92
Outdoor Coil—Fin Type	Louvered	Louvered	Louvered	Louvered
Tube Type	Rifled	Rifled	Rifled	Rifled
Tube Size in. [mm] OD	0.375 [9.5]	0.375 [9.5]	0.375 [9.5]	0.375 [9.5]
Face Area sq. ft. [sq. m]	53.3 [4.95]	53.3 [4.95]	53.3 [4.95]	53.3 [4.95]
Rows / FPI [FPcm]	2 / 22 [9]	2 / 22 [9]	2 / 22 [9]	2 / 22 [9]
Indoor Coil—Fin Type	Louvered	Louvered	Louvered	Louvered
Tube Type	Rifled	Rifled	Rifled	Rifled
Tube Size in. [mm]	0.375 [9.5]	0.375 [9.5]	0.375 [9.5]	0.375 [9.5]
Face Area sq. ft. [sq. m]	26.67 [2.48]	26.67 [2.48]	26.67 [2.48]	26.67 [2.48]
Rows / FPI [FPcm]	4 / 15 [6]	4 / 15 [6]	4 / 15 [6]	4 / 15 [6]
Refrigerant Control	TX Valves	TX Valves	TX Valves	TX Valves
Drain Connection No./Size in. [mm]	1/1 [25.4]	1/1 [25.4]	1/1 [25.4]	1/1 [25.4]
Outdoor Fan—Type	Propeller	Propeller	Propeller	Propeller
No. Used/Diameter in. [mm]	6/24 [609.6]	6/24 [609.6]	6/24 [609.6]	6/24 [609.6]
Drive Type/No. Speeds	Direct/1	Direct/1	Direct/1	Direct/1
CFM [L/s]	19800 [9344]	19800 [9344]	19800 [9344]	19800 [9344]
No. Motors/HP	6 at 1/3 HP	6 at 1/3 HP	6 at 1/3 HP	6 at 1/3 HP
Motor RPM	1075	1075	1075	1075
Indoor Fan—Type	FC Centrifugal	FC Centrifugal	FC Centrifugal	FC Centrifugal
No. Used/Diameter in. [mm]	2/18x9 [457x229]	2/18x9 [457x229]	2/18x9 [457x229]	2/18x9 [457x229]
Drive Type	Belt (Adjustable)	Belt (Adjustable)	Belt (Adjustable)	Belt (Adjustable)
No. Speeds (Standard / VFD)	Single / Multiple	Single / Multiple	Single / Multiple	Single
No. Motors	1	1	1	1
Motor HP	7 1/2	10	10	7 1/2
Motor RPM	1725	1725	1725	1725
Motor Frame Size	213	215	215	213
Filter—Type	Disposable	Disposable	Disposable	Disposable
Furnished	Yes	Yes	Yes	Yes
(NO.) Size Recommended in. [mm x mm x mm]	(8)2x25x20 [51x635x508]	(8)2x25x20 [51x635x508]	(8)2x25x20 [51x635x508]	(8)2x25x20 [51x635x508]
Refrigerant Charge Oz. (Sys. 1/Sys. 2) [g]	339/357 [9611/10121]	339/357 [9611/10121]	339/357 [9611/10121]	339/357 [9611/10121]
Weights				
Net Weight lbs. [kg]	2402 [1090]	2399 [1088]	2413 [1095]	2422 [1099]
Ship Weight lbs. [kg]	2529 [1147]	2525 [1145]	2540 [1152]	2549 [1156]

See Page 24 for Notes.

[ ] Designates Metric Conversions

NOM. SIZES 15-25 TONS [52.8-87.9 kW] MODELS

Model RKNL- Series Model RKNL- Series (with VFD)	C300YM40E
Cooling Performance[1]	
Gross Cooling Capacity Btu [kW]	312,000 [91.42]
EER/SEER[2]	10/NA
Nominal CFM/AHRI Rated CFM [L/s]	10000/9475 [4719/4471]
AHRI Net Cooling Capacity Btu [kW]	294,000 [86.14]
Net Sensible Capacity Btu [kW]	214,100 [62.73]
Net Latent Capacity Btu [kW]	79,900 [23.41]
IEER[3] Latent (Standard / VFD)	10.1
Net System Power kW	29.39
Heating Performance (Gas)[4]	
Heating Input Btu [kW] (1st Stage / 2nd Stage)	200,000/400,000 [58.6/117.2]
Heating Output Btu [kW] (1st Stage / 2nd Stage)	162,000/324,000 [47.47/94.93]
Temperature Rise Range °F [°C] (1st Stage / 2nd Stage)	15-45 [8.3-25] / 15-45 [8.3-25]
Steady State Efficiency (%)	81
No. Burners	14
No. Stages	2
Gas Connection Pipe Size in. [mm]	0.75 [19]
Compressor	
No./Type	2/Scroll
Outdoor Sound Rating (dB)[5]	92
Outdoor Coil—Fin Type	Louvered
Tube Type	Rifled
Tube Size in. [mm] OD	0.375 [9.5]
Face Area sq. ft. [sq. m]	53.3 [4.95]
Rows / FPI [FPcm]	2 / 22 [9]
Indoor Coil—Fin Type	Louvered
Tube Type	Rifled
Tube Size in. [mm]	0.375 [9.5]
Face Area sq. ft. [sq. m]	26.67 [2.48]
Rows / FPI [FPcm]	4 / 15 [6]
Refrigerant Control	TX Valves
Drain Connection No./Size in. [mm]	1/1 [25.4]
Outdoor Fan—Type	Propeller
No. Used/Diameter in. [mm]	6/24 [609.6]
Drive Type/No. Speeds	Direct/1
CFM [L/s]	19800 [9344]
No. Motors/HP	6 at 1/3 HP
Motor RPM	1075
Indoor Fan—Type	FC Centrifugal
No. Used/Diameter in. [mm]	2/18x9 [457x229]
Drive Type	Belt (Adjustable)
No. Speeds (Standard / VFD)	Single
No. Motors	1
Motor HP	10
Motor RPM	1725
Motor Frame Size	215
Filter—Type	Disposable
Furnished	Yes
(NO.) Size Recommended in. [mm x mm x mm]	(8)2x25x20 [51x635x508]
Refrigerant Charge Oz. (Sys. 1/Sys. 2) [g]	339/357 [9611/10121]
Weights	
Net Weight lbs. [kg]	2433 [1104]
Ship Weight lbs. [kg]	2560 [1161]

See Page 24 for Notes.

[ ] Designates Metric Conversions

NOTES:

1. Cooling Performance is rated at 95° F ambient, 80° F entering dry bulb, 67° F entering wet bulb. Gross capacity does not include the effect of fan motor heat. AHRI capacity is net and includes the effect of fan motor heat. Units are suitable for operation to ±20% of nominal cfm. Units are certified in accordance with the Unitary Air Conditioner Equipment certification program, which is based on AHRI Standard 210/240 or 340/360.
2. EER and/or SEER are rated at AHRI conditions and in accordance with DOE test procedures.
3. Integrated Energy Efficiency Ratio (IEER) is rated in accordance with AHRI Standard 210/240 or 360.
4. Heating Performance limit settings and rating data were established and approved under laboratory test conditions using American National Standard Institute standards. Ratings shown are for elevations up to 2000 feet. For elevations above 2000 feet, ratings should be reduced at the rate of 4% for each 1000 feet above sea level.
5. Outdoor Sound Rating shown is tested in accordance with AHRI Standard 270.
6. 25 ton model (C300) is outside the scope of AHRI Standard 340/360.

GROSS SYSTEMS PERFORMANCE DATA—C/H180

ENTERING INDOOR AIR @ 80°F [26.7°C] dbE ①											
wbE			71°F [21.7°C]			67°F [19.4°C]			63°F [17.2°C]		
CFM [L/s]			7200 [3398]	5900 [2784]	4800 [2265]	7200 [3398]	5900 [2784]	4800 [2265]	7200 [3398]	5900 [2784]	4800 [2265]
DR ①			.04	.08	.13	.04	.08	.13	.04	.08	.13
OUTDOOR DRY BULB TEMPERATURE °F [°C]	75 [23.9]	Total BTUH [kW]	226.5 [66.4]	217.8 [63.8]	210.4 [61.7]	214.3 [62.8]	206.0 [60.4]	199.0 [58.3]	206.3 [60.5]	198.4 [58.1]	191.7 [56.2]
		Sens BTUH [kW]	148.8 [43.6]	126.2 [37.0]	108.5 [31.8]	174.1 [51.0]	149.6 [43.9]	130.2 [38.2]	193.4 [56.7]	167.5 [49.1]	146.8 [43.0]
		Power	12.6	12.3	12.1	12.4	12.2	12.0	12.2	12.0	11.8
	80 [26.7]	Total BTUH [kW]	222.2 [65.1]	213.6 [62.6]	206.4 [60.5]	209.9 [61.5]	201.8 [59.1]	195.0 [57.1]	202.0 [59.2]	194.2 [56.9]	187.6 [55.0]
		Sens BTUH [kW]	146.6 [43.0]	124.3 [36.4]	106.9 [31.3]	171.9 [50.4]	147.8 [43.3]	128.7 [37.7]	191.3 [56.1]	165.7 [48.6]	145.3 [42.6]
		Power	13.1	12.9	12.7	13.0	12.7	12.5	12.8	12.6	12.4
	85 [29.4]	Total BTUH [kW]	217.5 [63.7]	209.1 [61.3]	202.0 [59.2]	205.3 [60.2]	197.3 [57.8]	190.7 [55.9]	197.3 [57.8]	189.7 [55.6]	183.3 [53.7]
		Sens BTUH [kW]	144.1 [42.2]	122.3 [35.9]	105.2 [30.8]	169.5 [49.7]	145.7 [42.7]	127.0 [37.2]	188.8 [55.3]	163.6 [48.0]	143.5 [42.1]
		Power	13.8	13.5	13.3	13.6	13.4	13.1	13.5	13.2	13.0
	90 [32.2]	Total BTUH [kW]	212.5 [62.3]	204.3 [59.9]	197.4 [57.9]	200.2 [58.7]	192.5 [56.4]	186.0 [54.5]	192.3 [56.4]	184.9 [54.2]	178.6 [52.3]
		Sens BTUH [kW]	141.4 [41.5]	120.0 [35.2]	103.3 [30.3]	166.7 [48.9]	143.5 [42.1]	125.1 [36.7]	186.2 [54.6]	161.4 [47.3]	141.6 [41.5]
		Power	14.5	14.2	14.0	14.3	14.0	13.8	14.2	13.9	13.7
	95 [35]	Total BTUH [kW]	207.2 [60.7]	199.2 [58.4]	192.4 [56.4]	194.9 [57.1]	187.4 [54.9]	181.0 [53.0]	187.0 [54.8]	179.8 [52.7]	173.7 [50.9]
		Sens BTUH [kW]	138.5 [40.6]	117.6 [34.5]	101.2 [29.7]	163.9 [48.0]	141.1 [41.4]	123.0 [36.1]	183.3 [53.7]	159.0 [46.6]	139.6 [40.9]
		Power	15.2	14.9	14.7	15.1	14.8	14.5	14.9	14.6	14.4
	100 [37.8]	Total BTUH [kW]	201.5 [59.1]	193.7 [56.8]	187.2 [54.9]	189.2 [55.4]	181.9 [53.3]	175.8 [51.5]	181.3 [53.1]	174.3 [51.1]	168.4 [49.4]
		Sens BTUH [kW]	135.4 [39.7]	115.0 [33.7]	99.1 [29.1]	160.7 [47.1]	138.4 [40.6]	120.8 [35.4]	180.1 [52.8]	156.3 [45.8]	137.3 [40.2]
		Power	16.0	15.7	15.4	15.9	15.6	15.3	15.7	15.4	15.1
	105 [40.6]	Total BTUH [kW]	195.5 [57.3]	188.0 [55.1]	181.6 [53.2]	183.2 [53.7]	176.2 [51.6]	170.2 [49.9]	175.3 [51.4]	168.5 [49.4]	162.8 [47.7]
		Sens BTUH [kW]	132.0 [38.7]	112.2 [32.9]	96.6 [28.3]	157.3 [46.1]	135.6 [39.8]	118.3 [34.7]	175.3 [51.4]	153.4 [45.0]	134.8 [39.5]
		Power	16.9	16.5	16.3	16.7	16.4	16.1	16.5	16.2	16.0
	110 [43.3]	Total BTUH [kW]	189.2 [55.4]	181.9 [53.3]	175.7 [51.5]	176.9 [51.8]	170.1 [49.9]	164.3 [48.2]	169.0 [49.5]	162.5 [47.6]	156.9 [46.0]
		Sens BTUH [kW]	128.4 [37.6]	109.1 [32.0]	93.9 [27.5]	153.7 [45.1]	132.6 [38.9]	115.8 [33.9]	169.0 [49.5]	150.5 [44.1]	132.3 [38.8]
		Power	17.8	17.4	17.1	17.6	17.3	17.0	17.5	17.1	16.8
	115 [46.1]	Total BTUH [kW]	182.5 [53.5]	175.5 [51.4]	169.5 [49.7]	170.2 [49.9]	163.7 [48.0]	158.1 [46.3]	162.3 [47.6]	156.0 [45.7]	150.8 [44.2]
		Sens BTUH [kW]	124.5 [36.5]	105.9 [31.0]	91.2 [26.7]	149.9 [43.9]	129.4 [37.9]	113.0 [33.1]	162.3 [47.6]	147.2 [43.2]	129.6 [38.0]
		Power	18.7	18.4	18.1	18.6	18.2	17.9	18.4	18.1	17.8

GROSS SYSTEMS PERFORMANCE DATA—C/H210

ENTERING INDOOR AIR @ 80°F [26.7°C] dbE ①											
wbE			71°F [21.7°C]			67°F [19.4°C]			63°F [17.2°C]		
CFM [L/s]			8400 [3964]	7025 [3315]	5600 [2643]	8400 [3964]	7025 [3315]	5600 [2643]	8400 [3964]	7025 [3315]	5600 [2643]
DR ①			.06	.09	.13	.06	.09	.13	.06	.09	.13
OUTDOOR DRY BULB TEMPERATURE °F [°C]	75 [23.9]	Total BTUH [kW]	258.4 [75.7]	249.5 [73.1]	240.3 [70.4]	244.1 [71.5]	235.7 [69.1]	227.0 [66.5]	231.9 [68.0]	223.9 [65.6]	215.7 [63.2]
		Sens BTUH [kW]	193.9 [56.8]	168.8 [49.5]	144.5 [42.4]	224.6 [65.8]	197.4 [57.9]	170.8 [50.1]	231.9 [68.0]	217.1 [63.6]	189.1 [55.4]
		Power	13.0	12.8	12.5	12.8	12.6	12.4	12.7	12.4	12.2
	80 [26.7]	Total BTUH [kW]	252.7 [74.1]	244.0 [71.5]	235.0 [68.9]	238.4 [69.9]	230.2 [67.5]	221.7 [65.0]	226.2 [66.3]	218.4 [64.0]	210.4 [61.7]
		Sens BTUH [kW]	182.3 [53.4]	158.3 [46.4]	135.2 [39.6]	212.9 [62.4]	186.9 [54.8]	161.5 [47.3]	226.2 [66.3]	206.6 [60.6]	179.8 [52.7]
		Power	13.6	13.4	13.1	13.4	13.2	13.0	13.3	13.0	12.8
	85 [29.4]	Total BTUH [kW]	246.7 [72.3]	238.2 [69.8]	229.4 [67.2]	232.4 [68.1]	224.4 [65.8]	216.1 [63.3]	220.2 [64.5]	212.6 [62.3]	204.8 [60.0]
		Sens BTUH [kW]	171.9 [50.4]	149.0 [43.7]	126.9 [37.2]	202.7 [59.4]	177.7 [52.1]	153.4 [45.0]	220.2 [64.5]	197.4 [57.9]	171.7 [50.3]
		Power	14.2	14.0	13.7	14.1	13.8	13.6	13.9	13.7	13.4
	90 [32.2]	Total BTUH [kW]	240.4 [70.5]	232.1 [68.0]	223.5 [65.5]	226.1 [66.3]	218.3 [64.0]	210.3 [61.6]	213.9 [62.7]	206.5 [60.5]	198.9 [58.3]
		Sens BTUH [kW]	162.9 [47.8]	141.0 [41.3]	119.9 [35.1]	193.6 [56.7]	169.6 [49.7]	146.3 [42.9]	213.9 [62.7]	189.3 [55.5]	164.5 [48.2]
		Power	14.9	14.7	14.4	14.8	14.5	14.3	14.6	14.4	14.1
	95 [35]	Total BTUH [kW]	233.8 [68.5]	225.7 [66.1]	217.4 [63.7]	219.5 [64.3]	212.0 [62.1]	204.1 [59.8]	207.3 [60.8]	200.2 [58.7]	192.8 [56.5]
		Sens BTUH [kW]	155.3 [45.5]	134.2 [39.3]	114.0 [33.4]	186.0 [54.5]	162.9 [47.8]	140.3 [41.1]	207.0 [60.7]	182.6 [53.5]	158.6 [46.5]
		Power	15.7	15.4	15.1	15.5	15.2	15.0	15.3	15.1	14.8
	100 [37.8]	Total BTUH [kW]	226.9 [66.5]	219.1 [64.2]	211.0 [61.8]	212.6 [62.3]	205.3 [60.2]	197.7 [57.9]	200.4 [58.7]	193.5 [56.7]	186.4 [54.6]
		Sens BTUH [kW]	149.0 [43.7]	128.7 [37.7]	109.2 [32.0]	179.6 [52.6]	157.3 [46.1]	135.5 [39.7]	200.4 [58.7]	177.0 [51.9]	153.8 [45.1]
		Power	16.5	16.2	15.9	16.3	16.0	15.7	16.1	15.9	15.6
	105 [40.6]	Total BTUH [kW]	219.7 [64.4]	212.1 [62.2]	204.3 [59.9]	205.4 [60.2]	198.3 [58.1]	191.0 [56.0]	193.2 [56.6]	186.5 [54.7]	179.7 [52.7]
		Sens BTUH [kW]	143.9 [42.2]	124.3 [36.4]	105.5 [30.9]	174.6 [51.2]	152.9 [44.8]	131.8 [38.6]	193.2 [56.6]	172.7 [50.6]	150.2 [44.0]
		Power	17.3	17.0	16.7	17.1	16.8	16.5	17.0	16.7	16.4
	110 [43.3]	Total BTUH [kW]	212.2 [62.2]	204.9 [60.1]	197.3 [57.8]	197.9 [58.0]	191.1 [56.0]	184.0 [53.9]	185.7 [54.4]	179.3 [52.5]	172.7 [50.6]
		Sens BTUH [kW]	140.3 [41.1]	121.3 [35.6]	102.9 [30.2]	171.0 [50.1]	149.9 [43.9]	129.3 [37.9]	185.7 [54.4]	169.6 [49.7]	147.6 [43.3]
		Power	18.2	17.9	17.5	18.0	17.7	17.4	17.9	17.6	17.2
	115 [46.1]	Total BTUH [kW]	204.4 [59.9]	197.3 [57.8]	190.1 [55.7]	190.1 [55.7]	183.5 [53.8]	176.8 [51.8]	177.9 [52.1]	171.8 [50.3]	165.4 [48.5]
		Sens BTUH [kW]	138.1 [40.5]	119.4 [35.0]	101.6 [29.8]	168.7 [49.5]	148.0 [43.4]	127.9 [37.5]	177.9 [52.1]	167.8 [49.2]	146.1 [42.8]
		Power	19.1	18.8	18.5	19.0	18.6	18.3	18.8	18.5	18.1

DR —Depression ratio
dbE —Entering air dry bulb
wbE—Entering air wet bulb

Total —Total capacity x 1000 BTUH
Sens —Sensible capacity x 1000 BTUH
Power —KW input

NOTES: ① When the entering air dry bulb is other than 80°F [27°C], adjust the sensible capacity from the table by adding [1.10 x CFM x (1 – DR) x (dbE – 80)].

[ ] Designates Metric Conversions

GROSS SYSTEMS PERFORMANCE DATA—C/H240

ENTERING INDOOR AIR @ 80°F [26.7°C] dbE ①											
wbE			71°F [21.7°C]			67°F [19.4°C]			63°F [17.2°C]		
CFM [L/s]			9600 [4531]	7725 [3646]	6400 [3020]	9600 [4531]	7725 [3646]	6400 [3020]	9600 [4531]	7725 [3646]	6400 [3020]
DR ①			.06	.11	.15	.06	.11	.15	.06	.11	.15
OUTDOOR DRY BULB TEMPERATURE °F [°C]	75 [23.9]	Total BTUH [kW]	283.5 [83.1]	271.5 [79.6]	263.0 [77.1]	269.6 [79.0]	258.2 [75.7]	250.2 [73.3]	258.7 [75.8]	247.8 [72.6]	240.0 [70.3]
		Sens BTUH [kW]	187.4 [54.9]	156.3 [45.8]	136.0 [39.9]	220.5 [64.6]	186.7 [54.7]	164.4 [48.2]	245.6 [72.0]	209.7 [61.5]	185.7 [54.4]
		Power	15.4	15.1	14.9	15.3	15.0	14.7	15.1	14.8	14.6
	80 [26.7]	Total BTUH [kW]	280.8 [82.3]	269.0 [78.8]	260.6 [76.4]	267.0 [78.2]	255.7 [74.9]	247.7 [72.6]	256.1 [75.1]	245.3 [71.9]	237.6 [69.6]
		Sens BTUH [kW]	186.4 [54.6]	155.6 [45.6]	135.4 [39.7]	219.6 [64.4]	186.0 [54.5]	163.8 [48.0]	244.7 [71.7]	209.0 [61.3]	185.2 [54.3]
		Power	16.2	15.9	15.6	16.0	15.7	15.5	15.9	15.5	15.3
	85 [29.4]	Total BTUH [kW]	277.4 [81.3]	265.7 [77.9]	257.4 [75.4]	263.5 [77.2]	252.4 [74.0]	244.5 [71.7]	252.6 [74.0]	242.0 [70.9]	234.4 [68.7]
		Sens BTUH [kW]	184.9 [54.2]	154.4 [45.3]	134.4 [39.4]	218.1 [63.9]	184.8 [54.2]	162.7 [47.7]	243.1 [71.3]	207.8 [60.9]	184.2 [54.0]
		Power	17.0	16.7	16.4	16.9	16.5	16.3	16.7	16.3	16.1
	90 [32.2]	Total BTUH [kW]	273.1 [80.0]	261.6 [76.7]	253.4 [74.3]	259.3 [76.0]	248.3 [72.8]	240.6 [70.5]	248.4 [72.8]	237.9 [69.7]	230.5 [67.6]
		Sens BTUH [kW]	182.8 [53.6]	152.7 [44.8]	132.9 [39.0]	216.2 [63.4]	183.2 [53.7]	161.5 [47.3]	241.1 [70.7]	206.1 [60.4]	182.8 [53.6]
		Power	17.9	17.5	17.3	17.7	17.4	17.1	17.6	17.2	16.9
	95 [35]	Total BTUH [kW]	268.1 [78.6]	256.7 [75.2]	248.7 [72.9]	254.2 [74.5]	243.5 [71.4]	235.9 [69.1]	243.3 [71.3]	233.0 [68.3]	225.8 [66.2]
		Sens BTUH [kW]	180.2 [52.8]	150.5 [44.1]	131.1 [38.4]	213.5 [62.6]	181.1 [53.1]	159.6 [46.8]	238.6 [69.9]	204.0 [59.8]	181.0 [53.1]
		Power	18.8	18.4	18.2	18.7	18.3	18.0	18.5	18.1	17.8
	100 [37.8]	Total BTUH [kW]	262.2 [76.8]	251.1 [73.6]	243.3 [71.3]	248.3 [72.8]	237.8 [69.7]	230.4 [67.5]	237.4 [69.6]	227.4 [66.6]	220.3 [64.6]
		Sens BTUH [kW]	177.1 [51.9]	148.0 [43.4]	129.0 [37.8]	210.4 [61.7]	178.5 [52.3]	157.4 [46.1]	235.3 [69.0]	201.4 [59.0]	178.7 [52.4]
		Power	19.8	19.4	19.1	19.6	19.2	18.9	19.5	19.1	18.8
	105 [40.6]	Total BTUH [kW]	255.5 [74.9]	244.7 [71.7]	237.1 [69.5]	241.6 [70.8]	231.4 [67.8]	224.2 [65.7]	230.7 [67.6]	221.0 [64.8]	214.1 [62.7]
		Sens BTUH [kW]	173.4 [50.8]	145.0 [42.5]	126.4 [37.1]	206.6 [60.6]	175.4 [51.4]	154.7 [45.3]	230.7 [67.6]	198.4 [58.2]	176.2 [51.6]
		Power	20.8	20.4	20.1	20.7	20.2	19.9	20.5	20.1	19.8
	110 [43.3]	Total BTUH [kW]	248.0 [72.7]	237.5 [69.6]	230.1 [67.4]	234.1 [68.6]	224.2 [65.7]	217.2 [63.7]	223.2 [65.4]	213.8 [62.7]	207.1 [60.7]
		Sens BTUH [kW]	169.2 [49.6]	141.5 [41.5]	123.4 [36.2]	202.4 [59.3]	171.9 [50.4]	151.7 [44.5]	223.2 [65.4]	194.9 [57.1]	173.1 [50.7]
		Power	21.9	21.5	21.1	21.7	21.3	21.0	21.6	21.1	20.8
	115 [46.1]	Total BTUH [kW]	239.6 [70.2]	229.5 [67.3]	222.3 [65.1]	225.8 [66.2]	216.2 [63.4]	209.5 [61.4]	214.9 [63.0]	205.8 [60.3]	199.4 [58.4]
		Sens BTUH [kW]	164.3 [48.2]	137.5 [40.3]	119.9 [35.1]	197.7 [58.0]	168.0 [49.2]	148.4 [43.5]	214.9 [63.0]	191.0 [56.0]	169.8 [49.8]
		Power	23.1	22.6	22.2	22.9	22.4	22.1	22.7	22.2	21.9

GROSS SYSTEMS PERFORMANCE DATA—C/H300

ENTERING INDOOR AIR @ 80°F [26.7°C] dbE ①											
wbE			71°F [21.7°C]			67°F [19.4°C]			63°F [17.2°C]		
CFM [L/s]			12000 [5663]	9475 [4472]	8000 [3776]	12000 [5663]	9475 [4472]	8000 [3776]	12000 [5663]	9475 [4472]	8000 [3776]
DR ①			.02	.08	0.11	.02	.08	0.11	.02	.08	0.11
OUTDOOR DRY BULB TEMPERATURE °F [°C]	75 [23.9]	Total BTUH [kW]	376.4 [110.3]	359.0 [105.2]	348.9 [102.3]	358.0 [104.9]	341.5 [100.1]	331.8 [97.2]	347.0 [101.7]	330.9 [97.0]	321.6 [94.3]
		Sens BTUH [kW]	251.6 [73.7]	206.4 [60.5]	182.0 [53.3]	294.2 [86.2]	245.2 [71.9]	218.4 [64.0]	326.2 [95.6]	274.0 [80.3]	245.5 [72.0]
		Power	20.8	20.3	20.0	20.5	20.0	19.7	20.2	19.7	19.5
	80 [26.7]	Total BTUH [kW]	369.9 [108.4]	352.8 [103.4]	342.8 [100.5]	351.5 [103.0]	335.2 [98.2]	325.7 [95.5]	340.4 [99.8]	324.6 [95.1]	315.5 [92.5]
		Sens BTUH [kW]	248.1 [72.7]	203.6 [59.7]	179.5 [52.6]	290.8 [85.2]	242.3 [71.0]	215.9 [63.3]	322.6 [94.6]	271.1 [79.5]	243.0 [71.2]
		Power	21.7	21.2	21.0	21.4	21.0	20.7	21.2	20.7	20.4
	85 [29.4]	Total BTUH [kW]	362.5 [106.2]	345.7 [101.3]	335.9 [98.4]	344.1 [100.8]	328.2 [96.2]	318.9 [93.5]	333.0 [97.6]	317.6 [93.1]	308.6 [90.4]
		Sens BTUH [kW]	244.2 [71.6]	200.4 [58.7]	176.8 [51.8]	286.8 [84.1]	239.2 [70.1]	213.2 [62.5]	318.6 [93.4]	268.0 [78.6]	240.2 [70.4]
		Power	22.8	22.2	21.9	22.5	22.0	21.7	22.2	21.7	21.4
	90 [32.2]	Total BTUH [kW]	354.3 [103.8]	338.0 [99.1]	328.4 [96.2]	335.9 [98.4]	320.4 [93.9]	311.3 [91.2]	324.9 [95.2]	309.8 [90.8]	301.1 [88.2]
		Sens BTUH [kW]	239.8 [70.3]	197.0 [57.7]	173.8 [50.9]	282.4 [82.8]	235.7 [69.1]	210.1 [61.6]	314.4 [92.2]	264.5 [77.5]	237.2 [69.5]
		Power	23.9	23.3	23.0	23.6	23.0	22.7	23.3	22.7	22.4
	95 [35]	Total BTUH [kW]	345.4 [101.2]	329.4 [96.5]	320.1 [93.8]	327.0 [95.8]	311.9 [91.4]	303.1 [88.8]	315.9 [92.6]	301.3 [88.3]	292.8 [85.8]
		Sens BTUH [kW]	235.2 [68.9]	193.2 [56.6]	170.5 [50.0]	277.8 [81.4]	232.0 [68.0]	207.0 [60.7]	309.7 [90.8]	260.8 [76.4]	234.0 [68.6]
		Power	25.0	24.4	24.1	24.7	24.1	23.8	24.4	23.9	23.5
	100 [37.8]	Total BTUH [kW]	335.7 [98.4]	320.2 [93.8]	311.1 [91.2]	317.3 [93.0]	302.6 [88.7]	294.1 [86.2]	306.2 [89.7]	292.1 [85.6]	283.8 [83.2]
		Sens BTUH [kW]	230.3 [67.5]	189.3 [55.5]	167.1 [49.0]	272.9 [80.0]	228.0 [66.8]	203.6 [59.7]	304.7 [89.3]	256.9 [75.3]	230.5 [67.6]
		Power	26.2	25.6	25.3	25.9	25.3	25.0	25.6	25.1	24.7
	105 [40.6]	Total BTUH [kW]	325.2 [95.3]	310.2 [90.9]	301.4 [88.3]	306.8 [89.9]	292.6 [85.8]	284.3 [83.3]	295.7 [86.7]	282.0 [82.6]	274.1 [80.3]
		Sens BTUH [kW]	224.9 [65.9]	185.0 [54.2]	163.4 [47.9]	267.5 [78.4]	223.7 [65.6]	199.8 [58.6]	295.7 [86.7]	252.5 [74.0]	226.8 [66.5]
		Power	27.5	26.9	26.5	27.2	26.6	26.2	26.9	26.3	25.9
	110 [43.3]	Total BTUH [kW]	313.9 [92.0]	299.4 [87.7]	290.9 [85.3]	295.5 [86.6]	281.9 [82.6]	273.9 [80.3]	284.4 [83.3]	271.3 [79.5]	263.6 [77.3]
		Sens BTUH [kW]	219.3 [64.3]	180.5 [52.9]	159.5 [46.8]	261.9 [76.8]	219.3 [64.3]	195.9 [57.4]	284.4 [83.4]	248.1 [72.7]	222.9 [65.3]
		Power	28.9	28.2	27.8	28.6	27.9	27.5	28.3	27.6	27.2
	115 [46.1]	Total BTUH [kW]	301.8 [88.4]	287.9 [84.4]	279.7 [82.0]	283.4 [83.1]	270.4 [79.2]	262.7 [77.0]	272.4 [79.8]	259.8 [76.1]	252.4 [74.0]
		Sens BTUH [kW]	213.2 [62.5]	175.7 [51.5]	155.3 [45.5]	255.8 [75.0]	214.5 [62.9]	191.8 [56.2]	272.4 [79.8]	243.3 [71.3]	218.8 [64.1]
		Power	30.3	29.6	29.2	30.0	29.3	28.9	29.7	29.0	28.6

DR —Depression ratio
dbE —Entering air dry bulb
wbE—Entering air wet bulb

Total —Total capacity x 1000 BTUH
Sens —Sensible capacity x 1000 BTUH
Power —KW input

NOTES: ① When the entering air dry bulb is other than 80°F [27°C], adjust the sensible capacity from the table by adding [1.10 x CFM x (1 – DR) x (dbE – 80)].

[ ] Designates Metric Conversions

AIRFLOW PERFORMANCE—15 TON [52.8 kW]–SIDEFLOW

Air Flow CFM [L/s]	Model RKNL-C/H180 Voltage 208/230, 460, 575 — 3 Phase																																							
	External Static Pressure—Inches of Water [kPa]																																							
	0.1 [.02]		0.2 [.05]		0.3 [.07]		0.4 [.10]		0.5 [.12]		0.6 [.15]		0.7 [.17]		0.8 [.20]		0.9 [.22]		1.0 [.25]		1.1 [.27]		1.2 [.30]		1.3 [.32]		1.4 [.35]		1.5 [.37]		1.6 [.40]		1.7 [.42]		1.8 [.45]		1.9 [.47]		2.0 [.50]	
	RPM	W	RPM	W	RPM	W	RPM	W	RPM	W	RPM	W	RPM	W	RPM	W	RPM	W	RPM	W	RPM	W	RPM	W	RPM	W	RPM	W	RPM	W	RPM	W	RPM	W	RPM	W	RPM	W	RPM	W	RPM	W
4800 [2265]	—	—	—	—	—	—	—	—	—	—	583	1393	608	1508	632	1621	656	1732	679	1841	701	1947	723	2052	744	2154	764	2254	785	2326	805	2430	825	2537	844	2647	863	2761	881	2878
5000 [2359]	—	—	—	—	—	—	—	—	—	—	591	1476	616	1593	640	1707	663	1820	686	1930	708	2038	729	2145	750	2248	771	2350	791	2420	811	2528	830	2640	850	2755	868	2873	887	2995
5200 [2454]	—	—	—	—	—	—	—	—	575	1442	600	1562	624	1681	648	1797	671	1911	693	2023	715	2133	736	2241	757	2346	777	2410	797	2520	817	2633	836	2749	855	2869	874	2992	892	3118
5400 [2548]	—	—	—	—	—	—	—	—	583	1530	608	1652	632	1772	655	1890	678	2005	701	2119	722	2231	743	2340	764	2447	784	2512	804	2626	823	2744	842	2865	861	2989	879	3117	897	3248
5600 [2643]	—	—	—	—	—	—	—	—	592	1621	616	1745	640	1866	663	1986	686	2103	708	2218	729	2331	750	2442	770	2551	791	2620	810	2739	830	2861	849	2987	867	3116	885	3248	903	3384
5800 [2737]	—	—	—	—	—	—	576	1588	601	1715	625	1840	649	1964	672	2085	694	2204	716	2321	737	2436	757	2548	778	2614	798	2735	817	2858	836	2985	855	3116	873	3249	891	3386	909	3527
6000 [2831]	—	—	—	—	—	—	585	1683	610	1813	634	1940	657	2065	680	2187	702	2308	724	2426	744	2543	765	2657	785	2731	805	2856	824	2984	843	3116	861	3251	879	3389	897	3531	914	3676
6200 [2926]	—	—	—	—	570	1650	595	1783	619	1913	643	2042	666	2169	688	2293	710	2415	731	2535	752	2653	773	2728	792	2854	812	2984	831	3116	850	3253	868	3392	886	3535	903	3682	920	3832
6400 [3020]	—	—	—	—	579	1750	604	1885	628	2017	652	2148	674	2276	697	2402	718	2526	739	2648	760	2767	780	2852	800	2983	819	3118	838	3255	856	3396	875	3541	892	3688	909	3839	926	3994
6600 [3114]	—	—	—	—	589	1854	614	1991	637	2125	661	2257	683	2386	705	2514	727	2640	748	2763	768	2884	788	2984	808	3119	827	3258	845	3400	863	3546	881	3695	899	3847	916	4003	—	—
6800 [3209]	—	—	574	1822	599	1961	623	2099	647	2235	670	2369	692	2500	714	2629	735	2756	756	2882	776	2984	796	3121	815	3262	834	3405	853	3552	871	3702	888	3856	905	4013	922	4173	—	—
7000 [3303]	—	—	584	1930	609	2072	633	2211	656	2349	679	2484	701	2617	723	2748	744	2877	764	3003	785	3124	804	3265	823	3410	842	3559	860	3710	878	3865	895	4024	912	4185	929	4350	—	—
7200 [3398]	570	1897	595	2042	619	2185	643	2327	666	2466	689	2602	711	2737	732	2870	753	3000	773	3127	793	3270	812	3416	831	3566	849	3719	868	3875	885	4035	902	4198	919	4364	—	—	—	—

NOTE: L-Drive left of bold line, M-Drive right of bold line.

Drive Package	L, R						M, S					
Motor H.P. [W]	3.0 [2237.1]						5.0 [3728.5]					
Blower Sheave	BK105H						BK105H					
Motor Sheave	1VL-44						1VP-56					
Turns Open	**1**	2	3	4	5	6	1	2	3	**4**	5	6
RPM	**733**	701	669	640	605	572	927	903	873	**840**	808	775

NOTES: 1. Factory sheave settings are shown in bold type.
2. Do not set motor sheave below minimum turns open shown.
3. Re-adjustment of sheave required to achieve rated airflow at AHRI minimum External Static Pressure.
4. Drive data shown is for horizontal airflow with dry coil. Add component resistance (below) to duct resistance to determine total External Static Pressure.

COMPONENT AIR RESISTANCE—15 TON [52.8 kW]

CFM [L/s]	4800 [2265]	5000 [2360]	5200 [2454]	5400 [2549]	5600 [2643]	5800 [2737]	6000 [2832]	6200 [2926]	6400 [3020]	6600 [3115]	6800 [3209]	7000 [3304]	7200 [3398]
	Resistance — Inches of Water [kPa]												
Wet Coil	0.03 [0.01]	0.04 [0.01]	0.05 [0.01]	0.06 [0.01]	0.06 [0.01]	0.07 [0.02]	0.08 [0.02]	0.09 [0.02]	0.10 [0.02]	0.10 [0.02]	0.11 [0.03]	0.12 [0.03]	0.13 [0.03]
Downflow	0.05 [0.01]	0.05 [0.01]	0.05 [0.01]	0.05 [0.01]	0.05 [0.01]	0.05 [0.01]	0.05 [0.01]	0.06 [0.01]	0.06 [0.01]	0.06 [0.01]	0.07 [0.02]	0.08 [0.02]	0.08 [0.02]
Downflow Economizer R.A. Damper Open	0.09 [0.02]	0.10 [0.02]	0.10 [0.02]	0.11 [0.03]	0.12 [0.03]	0.13 [0.03]	0.13 [0.03]	0.14 [0.03]	0.15 [0.04]	0.16 [0.04]	0.16 [0.04]	0.17 [0.04]	0.18 [0.04]
Horizontal Economizer R.A. Damper Open	0.00 [0.00]	0.01 [0.00]	0.01 [0.00]	0.02 [0.00]	0.02 [0.00]	0.03 [0.01]	0.03 [0.01]	0.04 [0.01]	0.04 [0.01]	0.05 [0.01]	0.05 [0.01]	0.06 [0.01]	0.06 [0.01]
Concentric Grill RXRN-AD80 or RXRN-AD81 & Transition RXMC-CJ07	0.21 [0.05]	0.25 [0.06]	0.28 [0.07]	0.32 [0.08]	0.35 [0.09]	0.39 [0.10]	0.43 [0.11]	0.46 [0.11]	0.50 [0.12]	0.54 [0.13]	0.57 [0.14]	0.61 [0.15]	0.64 [0.16]

NOTE: Add component resistance to duct resistance to determine total external static pressure.

AIRFLOW CORRECTION FACTORS—15 TON [52.8 kW]

ACTUAL—CFM [L/s]	4800 [2265]	5000 [2360]	5200 [2454]	5400 [2549]	5600 [2643]	5800 [2737]	6000 [2832]	6200 [2926]	6400 [3020]	6600 [3115]	6800 [3209]	7000 [3304]	7200 [3398]
TOTAL MBTUH	0.97	0.97	0.98	0.98	0.99	1.00	1.00	1.01	1.02	1.02	1.03	1.03	1.04
SENSIBLE MBTUH	0.87	0.90	0.92	0.94	0.97	0.99	1.02	1.04	1.06	1.09	1.11	1.14	1.16
POWER kW	0.98	0.98	0.99	0.99	0.99	1.00	1.00	1.00	1.01	1.01	1.01	1.02	1.02

NOTES: Multiply correction factor times gross performance data–resulting sensible capacity cannot exceed total capacity.

[ ] Designates Metric Conversions

AIRFLOW PERFORMANCE—17.5 TON [61.5 kW]–SIDEFLOW

Air Flow CFM [L/s]	Model RKNL-C/H210 Voltage 208/230, 460, 575 — 3 Phase																																							
	External Static Pressure—Inches of Water [kPa]																																							
	0.1 [.02]		0.2 [.05]		0.3 [.07]		0.4 [.10]		0.5 [.12]		0.6 [.15]		0.7 [.17]		0.8 [.20]		0.9 [.22]		1.0 [.25]		1.1 [.27]		1.2 [.30]		1.3 [.32]		1.4 [.35]		1.5 [.37]		1.6 [.40]		1.7 [.42]		1.8 [.45]		1.9 [.47]		2.0 [.50]	
	RPM	W	RPM	W	RPM	W	RPM	W	RPM	W	RPM	W	RPM	W	RPM	W	RPM	W	RPM	W	RPM	W	RPM	W	RPM	W	RPM	W	RPM	W	RPM	W	RPM	W	RPM	W	RPM	W	RPM	W
5600 [2643]	—	—	—	—	—	—	599	1627	625	1762	651	1900	676	2042	701	2186	725	2334	749	2484	773	2638	796	2795	819	2955	841	3119	863	3285	885	3455	906	3628	927	3803	—	—	—	—
5800 [2737]	—	—	—	—	—	—	610	1719	635	1856	661	1996	685	2140	710	2286	734	2436	757	2588	780	2744	803	2903	825	3065	847	3230	869	3399	890	3570	911	3745	931	3923	—	—	—	—
6000 [2831]	—	—	—	—	—	—	621	1822	646	1961	671	2103	695	2248	719	2397	742	2548	765	2703	788	2860	810	3021	832	3185	854	3353	875	3523	896	3696	916	3873	936	4053	—	—	—	—
6200 [2926]	—	—	—	—	607	1797	632	1935	657	2076	681	2220	705	2367	728	2517	751	2671	774	2827	796	2987	818	3150	840	3316	861	3485	881	3657	902	3833	921	4011	941	4193	—	—	—	—
6400 [3020]	—	—	—	—	619	1919	644	2058	668	2201	692	2347	715	2496	738	2649	761	2804	783	2962	805	3124	826	3289	847	3457	868	3628	888	3802	908	3980	927	4160	—	—	—	—	—	—
6600 [3114]	—	—	607	1912	632	2051	656	2192	679	2337	703	2485	726	2636	748	2790	770	2947	792	3108	813	3272	834	3438	855	3608	875	3781	895	3957	914	4137	933	4319	—	—	—	—	—	—
6800 [3209]	—	—	620	2052	644	2193	668	2336	691	2483	714	2633	737	2786	759	2942	780	3101	802	3264	822	3429	843	3598	863	3770	883	3945	902	4123	921	4304	940	4489	—	—	—	—	—	—
7000 [3303]	610	2064	634	2203	657	2345	681	2491	703	2640	726	2791	748	2946	769	3104	791	3266	811	3430	832	3598	852	3768	871	3942	891	4119	910	4299	928	4482	—	—	—	—	—	—	—	—
7200 [3398]	624	2223	648	2364	671	2508	693	2656	716	2807	738	2960	759	3117	780	3277	801	3440	822	3607	841	3776	861	3949	880	4124	899	4303	917	4485	936	4670	—	—	—	—	—	—	—	—
7400 [3492]	639	2392	662	2536	684	2682	707	2831	728	2984	750	3139	771	3298	792	3460	812	3625	832	3794	851	3965	871	4139	889	4317	908	4498	926	4682	—	—	—	—	—	—	—	—	—	—
7600 [3586]	653	2572	676	2717	698	2866	720	3017	742	3171	763	3329	783	3490	803	3654	823	3821	843	3991	862	4164	881	4341	899	4520	917	4703	934	4889	—	—	—	—	—	—	—	—	—	—
7800 [3681]	669	2762	691	2910	713	3060	734	3213	755	3369	775	3529	796	3692	815	3857	835	4026	854	4199	872	4374	891	4552	909	4734	926	4918	—	—	—	—	—	—	—	—	—	—	—	—
8000 [3775]	684	2963	706	3112	727	3264	748	3419	769	3578	789	3739	808	3904	828	4072	847	4243	865	4417	883	4594	901	4774	919	4958	936	5144	—	—	—	—	—	—	—	—	—	—	—	—
8200 [3869]	700	3174	721	3325	742	3479	762	3636	783	3796	802	3960	821	4127	840	4296	859	4469	877	4645	895	4824	912	5007	929	5192	—	—	—	—	—	—	—	—	—	—	—	—	—	—
8400 [3964]	716	3395	737	3548	757	3704	777	3863	797	4026	816	4191	835	4359	853	4531	871	4706	889	4884	906	5065	923	5249	940	5437	—	—	—	—	—	—	—	—	—	—	—	—	—	—

NOTE: L-Drive left of bold line, M-Drive right of bold line.

Drive Package	L, R						M, S					
Motor H.P. [W]	3.0 [2237.1]						5.0 [3728.5]					
Blower Sheave	BK100H						BK105H					
Motor Sheave	1VL-44						1VP-56					
Turns Open	1	2	**3**	4	5	6	1	2	3	**4**	5	6
RPM	763	731	**699**	666	633	601	939	909	879	**845**	814	781

NOTES: 1. Factory sheave settings are shown in bold type.
2. Do not set motor sheave below minimum turns open shown.
3. Re-adjustment of sheave required to achieve rated airflow at AHRI minimum External Static Pressure.
4. Drive data shown is for horizontal airflow with dry coil. Add component resistance (below) to duct resistance to determine total External Static Pressure.

COMPONENT AIR RESISTANCE—17.5 TON [61.5 kW]

CFM [L/s]	5600 [2643]	5800 [2737]	6000 [2831]	6200 [2926]	6400 [3020]	6600 [3114]	6800 [3209]	7000 [3303]	7200 [3398]	7400 [3492]	7600 [3586]	7800 [3681]	8000 [3775]	8200 [3869]	8400 [3964]
	Resistance — Inches of Water [kPa]														
Wet Coil	0.06 [.01]	0.07 [.02]	0.08 [.02]	0.09 [.02]	0.10 [.02]	0.10 [.02]	0.11 [.03]	0.12 [.03]	0.13 [.03]	0.14 [.03]	0.14 [.03]	0.15 [.04]	0.16 [.04]	0.17 [.04]	0.18 [.04]
Downflow	0.05 [.01]	0.05 [.01]	0.05 [.01]	0.06 [.01]	0.06 [.01]	0.06 [.01]	0.07 [.02]	0.08 [.02]	0.08 [.02]	0.09 [.02]	0.10 [.02]	0.11 [.03]	0.12 [.03]	0.13 [.03]	0.14 [.03]
Downflow Economizer R.A. Damper Open	0.12 [.03]	0.13 [.03]	0.13 [.03]	0.14 [.03]	0.15 [.04]	0.16 [.04]	0.16 [.04]	0.17 [.04]	0.18 [.04]	0.19 [.05]	0.20 [.05]	0.21 [.05]	0.22 [.05]	0.23 [.06]	0.24 [.06]
Horizontal Economizer R.A. Damper Open	0.02 [.00]	0.03 [.01]	0.03 [.01]	0.04 [.01]	0.04 [.01]	0.05 [.01]	0.05 [.01]	0.06 [.01]	0.06 [.01]	0.07 [.02]	0.07 [.02]	0.08 [.02]	0.09 [.02]	0.09 [.02]	0.10 [.02]
Concentric Grill RXRN-AD80 or RXRN-AD81 & Transition RXMC-CJ07	0.35 [.09]	0.39 [.10]	0.43 [.11]	0.46 [.11]	0.50 [.11]	0.54 [.13]	0.57 [.14]	0.61 [.15]	0.64 [.16]	0.68 [.17]	0.72 [.18]	0.75 [.19]	0.79 [.20]	0.83 [.21]	0.86 [.21]
Concentric Grill RXRN-AD86 & Transition RXMC-CK08	0.14 [.03]	0.17 [.04]	0.20 [.05]	0.23 [.06]	0.26 [.06]	0.29 [.07]	0.32 [.08]	0.35 [.09]	0.38 [.09]	0.41 [.10]	0.44 [.11]	0.47 [.12]	0.50 [.12]	0.53 [.13]	0.56 [.14]

AIRFLOW CORRECTION FACTORS—17.5 TON [61.5 kW]

ACTUAL—CFM [L/s]	5600 [2643]	5800 [2737]	6000 [2831]	6200 [2926]	6400 [3020]	6600 [3114]	6800 [3209]	7000 [3303]	7200 [3398]	7400 [3492]	7600 [3586]	7800 [3681]	8000 [3775]	8200 [3869]	8400 [3964]
TOTAL MBUH	0.96	0.97	0.97	0.98	0.98	0.99	0.99	1.00	1.00	1.01	1.01	1.02	1.03	1.03	1.04
SENSIBLE MBUH	0.86	0.88	0.90	0.92	0.94	0.96	0.98	1.00	1.02	1.04	1.06	1.08	1.10	1.12	1.14
POWER kW	0.99	0.99	0.99	0.99	1.00	1.00	1.00	1.00	1.01	1.01	1.01	1.01	1.02	1.02	1.02

NOTES: Multiply correction factor times gross performance data–resulting sensible capacity cannot exceed total capacity.

[ ] Designates Metric Conversions

AIRFLOW PERFORMANCE—20 TON [70.3 kW]–SIDEFLOW

Air Flow CFM [L/s]	Model RKNL-C/H240 Voltage 208/230, 460, 575 — 3 Phase																																							
	External Static Pressure—Inches of Water [kPa]																																							
	0.1 [.02]		0.2 [.05]		0.3 [.07]		0.4 [.10]		0.5 [.12]		0.6 [.15]		0.7 [.17]		0.8 [.20]		0.9 [.22]		1.0 [.25]		1.1 [.27]		1.2 [.30]		1.3 [.32]		1.4 [.35]		1.5 [.37]		1.6 [.40]		1.7 [.42]		1.8 [.45]		1.9 [.47]		2.0 [.50]	
	RPM	W	RPM	W	RPM	W	RPM	W	RPM	W	RPM	W	RPM	W	RPM	W	RPM	W	RPM	W	RPM	W	RPM	W	RPM	W	RPM	W	RPM	W	RPM	W	RPM	W	RPM	W	RPM	W	RPM	W	RPM	W
6400 [3020]	—	—	—	—	—	—	—	—	632	2007	654	2111	676	2218	698	2328	719	2439	741	2553	763	2670	785	2789	810	3065	830	3203	850	3342	869	3481	888	3621	906	3761	923	3902	937	4121
6600 [3115]	—	—	—	—	—	—	—	—	642	2106	664	2217	686	2330	707	2446	729	2564	751	2685	773	2808	798	3060	819	3201	838	3342	857	3484	876	3626	894	3769	912	3912	930	4056	944	4271
6800 [3209]	—	—	—	—	—	—	630	2100	652	2215	674	2332	696	2452	718	2574	739	2699	761	2826	783	2955	807	3202	827	3346	846	3490	865	3634	884	3780	901	3926	919	4072	933	4283	950	4432
7000 [3304]	—	—	—	—	—	—	641	2213	663	2334	684	2458	706	2585	728	2713	750	2844	772	2977	796	3207	816	3352	835	3499	854	3646	873	3794	891	3942	909	4091	926	4240	940	4448	957	4603
7200 [3398]	—	—	—	—	630	2211	651	2336	673	2464	695	2594	717	2727	739	2862	761	2999	783	3139	805	3362	825	3511	844	3661	863	3811	881	3961	898	4112	916	4264	932	4417	947	4624	964	4784
7400 [3492]	—	—	—	—	641	2338	663	2470	684	2604	706	2741	728	2880	750	3021	772	3165	795	3375	815	3526	834	3678	853	3831	871	3984	889	4137	906	4292	923	4447	938	4650	954	4810	971	4976
7600 [3587]	—	—	630	2339	652	2475	674	2613	696	2754	718	2897	740	3043	761	3190	783	3341	805	3545	824	3699	843	3854	862	4009	879	4165	897	4322	914	4479	930	4637	945	4841	962	5007	978	5179
7800 [3681]	—	—	642	2480	664	2622	686	2767	707	2914	729	3064	751	3216	773	3370	795	3567	815	3723	834	3880	852	4038	870	4197	888	4356	905	4515	922	4675	936	4878	953	5043	969	5214	986	5392
8000 [3776]	632	2485	654	2631	676	2780	698	2931	719	3085	741	3241	763	3399	785	3559	806	3750	825	3910	844	4070	862	4231	880	4392	897	4554	914	4717	930	4880	944	5084	961	5255	977	5432	993	5616
8200 [3870]	644	2640	666	2793	688	2948	710	3105	732	3265	754	3427	776	3592	797	3780	816	3942	835	4105	854	4268	871	4432	889	4596	906	4761	922	4927	936	5130	952	5300	969	5477	985	5660	1001	5850
8400 [3964]	657	2805	679	2964	701	3126	723	3290	745	3456	767	3625	789	3796	808	3978	827	4143	846	4309	864	4475	881	4642	898	4809	915	4977	931	5146	944	5352	961	5528	977	5710	993	5899	1008	6094
8600 [4059]	670	2980	692	3146	714	3314	736	3484	758	3657	780	3832	800	4017	819	4184	838	4352	856	4521	874	4690	891	4860	907	5030	924	5201	937	5408	953	5584	969	5765	985	5954	1001	6148	—	—
8800 [4153]	683	3166	705	3338	727	3512	749	3689	771	3868	793	4059	812	4229	831	4399	849	4570	867	4742	884	4914	901	5087	917	5260	933	5434	946	5645	962	5826	978	6013	993	6208	1009	6408	—	—
9000 [4248]	697	3361	719	3540	741	3721	763	3904	785	4089	805	4276	824	4449	842	4622	860	4796	877	4971	894	5146	911	5322	927	5498	939	5712	955	5892	971	6079	986	6272	1002	6472	—	—	—	—
9200 [4342]	711	3567	733	3752	755	3939	777	4129	798	4327	817	4502	835	4678	853	4854	871	5031	888	5209	905	5387	921	5565	933	5784	949	5963	964	6149	980	6342	995	6541	1010	6747	—	—	—	—
9400 [4436]	725	3783	747	3975	769	4168	792	4381	811	4558	829	4736	847	4915	865	5094	882	5274	899	5455	915	5636	931	5818	942	6040	958	6225	973	6418	989	6616	1004	6821	—	—	—	—	—	—
9600 [4531]	739	4010	762	4207	784	4407	805	4617	823	4798	842	4979	859	5161	877	5343	894	5526	910	5709	926	5894	937	6122	952	6307	968	6498	983	6696	998	6901	—	—	—	—	—	—	—	—

NOTE: L-Drive left of bold line, M-Drive right of bold line.

Drive Package	L, R						M, S						N(field installed only), T					
Motor H.P. [W]	5.0 [3728.5]						7.5 [5592.7]						7.5 [5592.7]					
Blower Sheave	BK130H						BK130H						BK120H					
Motor Sheave	1VP-56						1VP-71						1VP-71					
Turns Open	**1**	2	3	4	5	6	1	2	3	**4**	5	6	1	2	3	4	5	6
RPM	**756**	734	709	683	658	631	928	902	874	**847**	820	793	1009	981	955	928	899	870

NOTES: 1. Factory sheave settings are shown in bold type.
2. Do not set motor sheave below minimum turns open shown.
3. Re-adjustment of sheave required to achieve rated airflow at AHRI minimum External Static Pressure.
4. Drive data shown is for horizontal airflow with dry coil. Add component resistance (below) to duct resistance to determine total External Static Pressure.

COMPONENT AIRFLOW RESISTANCE—20 TON [70.3 kW]

CFM [L/s]	6400 [3020]	6600 [3114]	6800 [3209]	7000 [3303]	7200 [3398]	7400 [3492]	7600 [3586]	7800 [3681]	8000 [3775]	8200 [3869]	8400 [3964]	8600 [4058]	8800 [4153]	9000 [4247]	9200 [4341]	9400 [4436]	9600 [4530]
	Resistance — Inches of Water [kPa]																
Wet Coil	0.00 [.00]	0.00 [.00]	0.00 [.00]	0.01 [.00]	0.01 [.00]	0.02 [.00]	0.02 [.00]	0.03 [.01]	0.03 [.01]	0.04 [.01]	0.04 [.01]	0.05 [.01]	0.05 [.01]	0.06 [.01]	0.06 [.01]	0.07 [.02]	0.07 [.02]
Downflow	0.06 [.01]	0.06 [.01]	0.07 [.02]	0.08 [.02]	0.08 [.02]	0.09 [.02]	0.10 [.02]	0.11 [.03]	0.12 [.03]	0.13 [.03]	0.14 [.03]	0.15 [.04]	0.16 [.04]	0.18 [.04]	0.19 [.05]	0.20 [.05]	0.22 [.05]
Downflow Economizer R.A. Damper Open	0.15 [.04]	0.16 [.04]	0.16 [.04]	0.17 [.04]	0.18 [.04]	0.19 [.05]	0.20 [.05]	0.21 [.05]	0.22 [.05]	0.23 [.06]	0.24 [.06]	0.25 [.06]	0.26 [.06]	0.27 [.07]	0.28 [.07]	0.29 [.07]	0.30 [.07]
Horizontal Economizer R.A. Damper Open	0.04 [.01]	0.05 [.01]	0.05 [.01]	0.06 [.01]	0.06 [.01]	0.07 [.02]	0.07 [.02]	0.08 [.02]	0.09 [.02]	0.09 [.02]	0.10 [.02]	0.10 [.02]	0.11 [.03]	0.11 [.03]	0.12 [.03]	0.12 [.03]	0.13 [.03]
Concentric Grill RXRN-AD86 & Transition RXMC-CK08	0.26 [.06]	0.29 [.07]	0.32 [.08]	0.35 [.09]	0.38 [.09]	0.41 [.10]	0.44 [.11]	0.47 [.12]	0.5 [.12]	0.53 [.13]	0.56 [.14]	0.59 [.15]	0.62 [.15]	0.65 [.16]	0.69 [.17]	0.72 [.18]	0.75 [.19]

AIRFLOW CORRECTION FACTORS—20 TON [70.3 kW]

ACTUAL—CFM [L/s]	6400 [3020]	6600 [3114]	6800 [3209]	7000 [3303]	7200 [3398]	7400 [3492]	7600 [3586]	7800 [3681]	8000 [3775]	8200 [3869]	8400 [3964]	8600 [4058]	8800 [4153]	9000 [4247]	9200 [4341]	9400 [4436]	9600 [4530]
TOTAL MBH	0.97	0.97	0.98	0.98	0.99	0.99	1.00	1.00	1.01	1.01	1.02	1.02	1.03	1.03	1.03	1.04	1.04
SENSIBLE MBH	0.88	0.90	0.92	0.94	0.96	0.97	0.99	1.01	1.03	1.05	1.07	1.09	1.10	1.12	1.14	1.16	1.18
POWER kW	0.98	0.99	0.99	0.99	0.99	1.00	1.00	1.00	1.00	1.01	1.01	1.01	1.01	1.01	1.02	1.02	1.02

NOTES: Multiply correction factor times gross performance data–resulting sensible capacity cannot exceed total capacity.

[ ] Designates Metric Conversions

AIRFLOW PERFORMANCE—25 TON [87.9 kW]–SIDEFLOW

Air Flow CFM [L/s]	Model RKNL-C/H300 Voltage 208/230, 460, 575 — 3 Phase																																							
	External Static Pressure—Inches of Water [kPa]																																							
	0.1 [.02]		0.2 [.05]		0.3 [.07]		0.4 [.10]		0.5 [.12]		0.6 [.15]		0.7 [.17]		0.8 [.20]		0.9 [.22]		1.0 [.25]		1.1 [.27]		1.2 [.30]		1.3 [.32]		1.4 [.35]		1.5 [.37]		1.6 [.40]		1.7 [.42]		1.8 [.45]		1.9 [.47]		2.0 [.50]	
	RPM	W	RPM	W	RPM	W	RPM	W	RPM	W	RPM	W	RPM	W	RPM	W	RPM	W	RPM	W	RPM	W	RPM	W	RPM	W	RPM	W	RPM	W	RPM	W	RPM	W	RPM	W	RPM	W	RPM	W	RPM	W
8000 [3775]	—	—	—	—	—	—	—	—	—	—	—	—	—	—	794	3720	814	3870	833	4024	851	4182	869	4344	886	4510	903	4680	920	4854	948	5256	963	5410	979	5565	994	5720	1009	5877
8200 [3869]	—	—	—	—	—	—	—	—	—	—	—	—	—	—	807	3908	826	4065	845	4226	863	4392	880	4561	897	4735	914	4912	943	5296	958	5455	973	5614	988	5774	1003	5935	1018	6097
8400 [3964]	—	—	—	—	—	—	—	—	—	—	—	—	801	3947	820	4108	838	4273	856	4442	874	4614	891	4791	908	4972	924	5157	952	5503	967	5667	982	5832	997	5997	1012	6164	1028	6331
8600 [4058]	—	—	—	—	—	—	—	—	—	—	794	3989	813	4153	832	4321	850	4493	868	4670	886	4850	902	5034	919	5223	947	5557	962	5725	977	5894	992	6064	1007	6235	1022	6407	1037	6579
8800 [4153]	—	—	—	—	—	—	—	—	—	—	807	4200	826	4371	845	4547	862	4727	880	4910	897	5098	913	5290	942	5614	957	5787	972	5960	987	6134	1002	6310	1017	6486	1032	6663	1047	6841
9000 [4247]	—	—	—	—	—	—	—	—	801	4249	820	4424	839	4603	857	4786	874	4973	892	5164	908	5359	924	5558	952	5853	967	6031	982	6209	997	6389	1012	6570	1027	6752	1042	6934	1057	7118
9200 [4341]	—	—	—	—	—	—	795	4300	815	4478	833	4660	851	4847	869	5037	886	5232	903	5430	919	5633	947	5923	962	6105	977	6289	992	6473	1007	6658	1022	6844	1037	7031	1052	7219	1068	7408
9400 [4436]	—	—	—	—	790	4352	809	4534	828	4720	846	4910	864	5104	881	5302	898	5504	915	5710	943	5997	958	6184	972	6372	987	6561	1002	6750	1017	6941	1032	7132	1048	7325	1063	7518	—	—
9600 [4530]	—	—	—	—	804	4592	823	4781	841	4975	859	5172	876	5373	893	5579	910	5788	926	6002	953	6267	968	6460	983	6653	998	6847	1013	7042	1028	7238	1043	7434	1058	7632	—	—	—	—
9800 [4624]	—	—	798	4652	817	4845	836	5042	854	5242	872	5447	889	5656	905	5869	922	6085	949	6355	964	6551	979	6749	994	6947	1009	7147	1024	7347	1039	7548	1054	7751	1069	7954	—	—	—	—
10000 [4719]	793	4714	813	4910	831	5110	849	5315	867	5523	884	5735	901	5951	917	6171	945	6446	960	6647	975	6849	990	7052	1005	7256	1019	7461	1034	7667	1050	7873	1065	8081	—	—	—	—	—	—
10200 [4813]	808	4978	827	5181	845	5389	863	5600	880	5816	897	6035	913	6259	941	6542	956	6748	971	6954	986	7162	1001	7370	1016	7579	1031	7789	1046	8000	1061	8212	—	—	—	—	—	—	—	—
10400 [4908]	822	5254	840	5465	858	5680	876	5899	893	6122	909	6349	926	6580	953	6852	967	7063	982	7275	997	7488	1012	7701	1027	7916	1042	8131	1057	8348	1072	8565	—	—	—	—	—	—	—	—
10600 [5002]	836	5543	854	5761	872	5984	889	6210	906	6441	922	6675	949	6961	964	7176	979	7393	993	7610	1008	7828	1023	8047	1038	8267	1053	8488	1068	8710	—	—	—	—	—	—	—	—	—	—
10800 [5096]	850	5845	868	6071	885	6301	902	6534	918	6772	946	7074	961	7294	975	7514	990	7736	1005	7959	1020	8182	1035	8407	1050	8632	1065	8858	—	—	—	—	—	—	—	—	—	—	—	—
11000 [5191]	864	6160	882	6393	899	6630	915	6871	943	7191	958	7415	972	7640	987	7867	1002	8094	1017	8321	1032	8550	1046	8780	1061	9011	—	—	—	—	—	—	—	—	—	—	—	—	—	—
11200 [5285]	878	6487	895	6728	912	6972	940	7313	955	7541	969	7771	984	8001	999	8233	1014	8465	1029	8698	1043	8933	1058	9168	—	—	—	—	—	—	—	—	—	—	—	—	—	—	—	—
11400 [5379]	892	6827	909	7075	925	7328	952	7671	967	7905	981	8140	996	8376	1011	8613	1026	8851	1041	9089	1055	9329	1070	9570	—	—	—	—	—	—	—	—	—	—	—	—	—	—	—	—
11600 [5474]	906	7180	922	7436	950	7806	964	8044	979	8283	994	8524	1008	8765	1023	9007	1038	9250	1053	9494	1068	9739	—	—	—	—	—	—	—	—	—	—	—	—	—	—	—	—	—	—
11800 [5568]	920	7546	948	7944	962	8187	977	8431	991	8676	1006	8921	1021	9168	1035	9416	1050	9664	1065	9913	—	—	—	—	—	—	—	—	—	—	—	—	—	—	—	—	—	—	—	—
12000 [5663]	946	8087	960	8334	975	8583	989	8832	1004	9082	1019	9333	1033	9585	1048	9838	1063	10092	—	—	—	—	—	—	—	—	—	—	—	—	—	—	—	—	—	—	—	—	—	—

NOTE: L-Drive left of bold line, M-Drive right of bold line.

Drive Package	L, R						M, S					
Motor H.P. [W]	7.5 [5592.7]						10 [7457.0]					
Blower Sheave	BK130H						BK120H					
Motor Sheave	1VP-71						1VP-75					
Turns Open	**1**	2	3	4	5	6	1	2	3	**4**	5	6
RPM	**919**	894	869	844	817	790	1067	1039	1012	**982**	953	925

NOTES: 1. Factory sheave settings are shown in bold type.
2. Do not set motor sheave below minimum turns open shown.
3. Re-adjustment of sheave required to achieve rated airflow at AHRI minimum External Static Pressure.
4. Drive data shown is for horizontal airflow with dry coil. Add component resistance (below) to duct resistance to determine total External Static Pressure.

COMPONENT AIR RESISTANCE—25 TON [87.9 kW]

CFM [L/s]	8000 [3775]	8400 [3964]	8800 [4153]	9200 [4341]	9600 [4530]	10000 [4719]	10400 [4908]	10800 [5096]	11200 [5285]	11600 [5474]	12000 [5663]
	Resistance — Inches of Water [kPa]										
Wet Coil	0.07 [.02]	0.09 [.02]	0.10 [.02]	0.12 [.03]	0.13 [.03]	0.15 [.04]	0.16 [.04]	0.18 [.04]	0.19 [.05]	0.21 [.05]	0.22 [.05]
Downflow	0.12 [.03]	0.14 [.03]	0.16 [.04]	0.19 [.05]	0.22 [.05]	0.25 [.06]	0.29 [.07]	0.33 [.08]	0.37 [.09]	0.42 [.10]	0.46 [.11]
Downflow Economizer R.A. Damper Open	0.22 [.05]	0.24 [.06]	0.26 [.06]	0.28 [.07]	0.3 [.07]	0.32 [.08]	0.34 [.08]	0.37 [.09]	0.39 [.10]	0.41 [.10]	0.44 [.11]
Horizontal Economizer R.A. Damper Open	0.09 [.02]	0.10 [.02]	0.11 [.03]	0.12 [.03]	0.13 [.03]	0.14 [.03]	0.15 [.04]	0.16 [.04]	0.17 [.04]	0.18 [.04]	0.19 [.05]
Concentric Grill RXRN-AD88 & Transition RXMC-CL09	0.17 [.04]	0.23 [.06]	0.30 [.07]	0.36 [.09]	0.43 [.11]	0.50 [.12]	0.56 [.14]	0.63 [.16]	0.69 [.17]	0.76 [.19]	0.82 [.20]

AIRFLOW CORRECTION FACTORS—25 TON [87.9 kW]

ACTUAL—CFM [L/s]	8000 [3775]	8400 [3964]	8800 [4153]	9200 [4341]	9600 [4530]	10000 [4719]	10400 [4908]	10800 [5096]	11200 [5285]	11600 [5474]	12000 [5663]
TOTAL MBTUH	0.97	0.98	0.99	0.99	1.00	1.01	1.02	1.03	1.03	1.04	1.05
SENSIBLE MBTUH	0.89	0.92	0.95	0.98	1.01	1.04	1.08	1.11	1.14	1.17	1.20
POWER kW	0.99	0.99	1.00	1.00	1.00	1.01	1.01	1.01	1.02	1.02	1.02

NOTES: Multiply correction factor times gross performance data–resulting sensible capacity cannot exceed total capacity.

[ ] Designates Metric Conversions

ELECTRICAL DATA – RKNL- SERIES

		C180CL H180CR	C180CM H180CS	C180DL H180DR	C180DM H180DS	C180YL	C180YM
Unit Information	Unit Operating Voltage Range	187-253	187-253	414-506	414-506	518-632	518-632
	Volts	208/230	208/230	460	460	575	575
	Minimum Circuit Ampacity	78/78	81/81	38	40	28	30
	Minimum Overcurrent Protection Device Size	90/90	90/90	45	45	30	35
	Maximum Overcurrent Protection Device Size	100/100	100/100	45	50	35	35
Compressor Motor	No.	2	2	2	2	2	2
	Volts	200/230	200/230	460	460	575	575
	Phase	3	3	3	3	3	3
	RPM	3450	3450	3450	3450	3450	3450
	HP, Compressor 1	7	7	7	7	7	7
	Amps (RLA), Comp. 1	25/25	25/25	12.2	12.2	9	9
	Amps (LRA), Comp. 1	164/164	164/164	100	100	78	78
	HP, Compressor 2	7	7	7	7	7	7
	Amps (RLA), Comp. 2	25/25	25/25	12.2	12.2	9	9
	Amps (LRA), Comp. 2	164/164	164/164	100	100	78	78
Compressor Motor	No.	4	4	4	4	4	4
	Volts	208/230	208/230	460	460	575	575
	Phase	1	1	1	1	1	1
	HP	1/3	1/3	1/3	1/3	1/3	1/3
	Amps (FLA, each)	2.4/2.4	2.4/2.4	1.4	1.4	1	1
	Amps (LRA, each)	4.7/4.7	4.7/4.7	2.4	2.4	1.8	1.8
Evaporator Fan	No.	1	1	1	1	1	1
	Volts	208/230	208/230	460	460	575	575
	Phase	3	3	3	3	3	3
	HP	3	5	3	5	3	5
	Amps (FLA, each)	11.5/11.5	14.9/14.9	4.6	6.6	3.5	5.3
	Amps (LRA, each)	74.5/74.5	82.6/82.6	38.1	46.3	20	39.4

ELECTRICAL DATA – RKNL- SERIES

		C210CL H210CR	C210CM H210CS	C210DL H210DR	C210DM H210DS	C210YL	C210YM
Unit Information	Unit Operating Voltage Range	187-253	187-253	414-506	414-506	518-632	518-632
	Volts	208/230	208/230	460	460	575	575
	Minimum Circuit Ampacity	88/88	91/91	44	46	35	37
	Minimum Overcurrent Protection Device Size	100/100	100/100	50	50	40	40
	Maximum Overcurrent Protection Device Size	110/110	110/110	50	50	45	45
Compressor Motor	No.	2	2	2	2	2	2
	Volts	200/230	200/230	460	460	575	575
	Phase	3	3	3	3	3	3
	RPM	3450	3450	3450	3450	3450	3450
	HP, Compressor 1	7 1/2	7 1/2	7 1/2	7 1/2	7 1/2	7 1/2
	Amps (RLA), Comp. 1	29.5/29.5	29.5/29.5	14.7	14.7	12.2	12.2
	Amps (LRA), Comp. 1	195/195	195/195	95	95	80	80
	HP, Compressor 2	7 1/2	7 1/2	7 1/2	7 1/2	7 1/2	7 1/2
	Amps (RLA), Comp. 2	29.5/29.5	29.5/29.5	14.7	14.7	12.2	12.2
	Amps (LRA), Comp. 2	195/195	195/195	95	95	80	80
Compressor Motor	No.	4	4	4	4	4	4
	Volts	208/230	208/230	460	460	575	575
	Phase	1	1	1	1	1	1
	HP	1/3	1/3	1/3	1/3	1/3	1/3
	Amps (FLA, each)	2.4/2.4	2.4/2.4	1.4	1.4	1	1
	Amps (LRA, each)	4.7/4.7	4.7/4.7	2.4	2.4	1.8	1.8
Evaporator Fan	No.	1	1	1	1	1	1
	Volts	208/230	208/230	460	460	575	575
	Phase	3	3	3	3	3	3
	HP	3	5	3	5	3	5
	Amps (FLA, each)	11.5/11.5	14.9/14.9	4.6	6.6	3.5	5.3
	Amps (LRA, each)	74.5/74.5	82.6/82.6	38.1	46.3	20	39.4

ELECTRICAL DATA – RKNL- SERIES

		C240CL H240CR	C240CM H240CS	C240CN H240CT	C240DL H240DR	C240DM H240DS	C240DN H240DT	C240YL	C240YM	C240YN
Unit Information	Unit Operating Voltage	187-253	187-253	187-253	414-506	414-506	414-506	518-632	518-632	518-632
	Volts	208/230	208/230	208/230	460	460	460	575	575	575
	Minimum Circuit Ampacity	101/101	109/109	109/109	52	56	56	40	42	42
	Minimum Overcurrent Protection Device Size	110/110	125/125	125/125	60	60	60	45	50	50
	Maximum Overcurrent Protection Device Size	125/125	125/125	125/125	60	70	70	50	50	50
Compressor Motor	No.	2	2	2	2	2	2	2	2	2
	Volts	200/230	200/230	200/230	460	460	460	575	575	575
	Phase	3	3	3	3	3	3	3	3	3
	RPM	3450	3450	3450	3450	3450	3450	3450	3450	3450
	HP, Compressor 1	10	10	10	10	10	10	10	10	10
	Amps (RLA), Comp. 1	33.3/33.3	33.3/33.3	33.3/33.3	17.9	17.9	17.9	12.8	12.8	12.8
	Amps (LRA), Comp. 1	239/239	239/239	239/239	125	125	125	80	80	80
	HP, Compressor 2	7 1/2	7 1/2	7 1/2	7 1/2	7 1/2	7 1/2	7 1/2	7 1/2	7 1/2
	Amps (RLA), Comp. 2	29.5/29.5	29.5/29.5	29.5/29.5	14.7	14.7	14.7	12.2	12.2	12.2
	Amps (LRA), Comp. 2	195/195	195/195	195/195	95	95	95	80	80	80
Compressor Motor	No.	6	6	6	6	6	6	6	6	6
	Volts	208/230	208/230	208/230	460	460	460	575	575	575
	Phase	1	1	1	1	1	1	1	1	1
	HP	1/3	1/3	1/3	1/3	1/3	1/3	1/3	1/3	1/3
	Amps (FLA, each)	2.4/2.4	2.4/2.4	2.4/2.4	1.4	1.4	1.4	1	1	1
	Amps (LRA, each)	4.7/4.7	4.7/4.7	4.7/4.7	2.4	2.4	2.4	1.8	1.8	1.8
Evaporator Fan	No.	1	1	1	1	1	1	1	1	1
	Volts	208/230	208/230	208/230	460	460	460	575	575	575
	Phase	3	3	3	3	3	3	3	3	3
	HP	5	7 1/2	7 1/2	5	7 1/2	7 1/2	5	7 1/2	7 1/2
	Amps (FLA, each)	14.7/14.7	23.1/23.1	23.1/23.1	6.6	9.6	9.6	5.3	7.8	7.8
	Amps (LRA, each)	82.6/82.6	136/136	136/136	46.3	67	67	39.4	53.8	53.8

ELECTRICAL DATA – RKNL- SERIES

		C300CL H300CR	C300CM H300CS	C300DL H300DR	C300DM H300DS	C300YL	C300YM
Unit Information	Unit Operating Voltage Range	187-253	187-253	414-506	414-506	518-632	518-632
	Volts	208/230	208/230	460	460	575	575
	Minimum Circuit Ampacity	147/147	149/149	60	63	47	50
	Minimum Overcurrent Protection Device Size	175/175	175/175	70	70	60	60
	Maximum Overcurrent Protection Device Size	175/175	175/175	70	80	60	60
Compressor Motor	No.	2	2	2	2	2	2
	Volts	200/240	200/240	460	460	575	575
	Phase	3	3	3	3	3	3
	RPM	3450	3450	3450	3450	3450	3450
	HP, Compressor 1	11 1/2	11 1/2	11 1/2	11 1/2	11 1/2	11 1/2
	Amps (RLA), Comp. 1	48.1/48.1	48.1/48.1	18.6	18.6	14.7	14.7
	Amps (LRA), Comp. 1	245/245	245/245	125	125	100	100
	HP, Compressor 2	11 1/2	11 1/2	11 1/2	11 1/2	11 1/2	11 1/2
	Amps (RLA), Comp. 2	48.1/48.1	48.1/48.1	18.6	18.6	14.7	14.7
	Amps (LRA), Comp. 2	245/245	245/245	125	125	100	100
Compressor Motor	No.	6	6	6	6	6	6
	Volts	208/230	208/230	460	460	575	575
	Phase	1	1	1	1	1	1
	HP	1/3	1/3	1/3	1/3	1/3	1/3
	Amps (FLA, each)	2.4/2.4	2/2	1.4	1.4	1	1
	Amps (LRA, each)	4.7/4.7	3.9/3.9	2.4	2.4	1.8	1.8
Evaporator Fan	No.	1	1	1	1	1	1
	Volts	208/230	208/230	460	460	575	575
	Phase	3	3	3	3	3	3
	HP	7 1/2	10	7 1/2	10	7 1/2	10
	Amps (FLA, each)	24.2/24.2	28.5/28.5	9.6	12.5	7.8	10
	Amps (LRA, each)	136/136	178/178	67	74.6	53.8	59.2

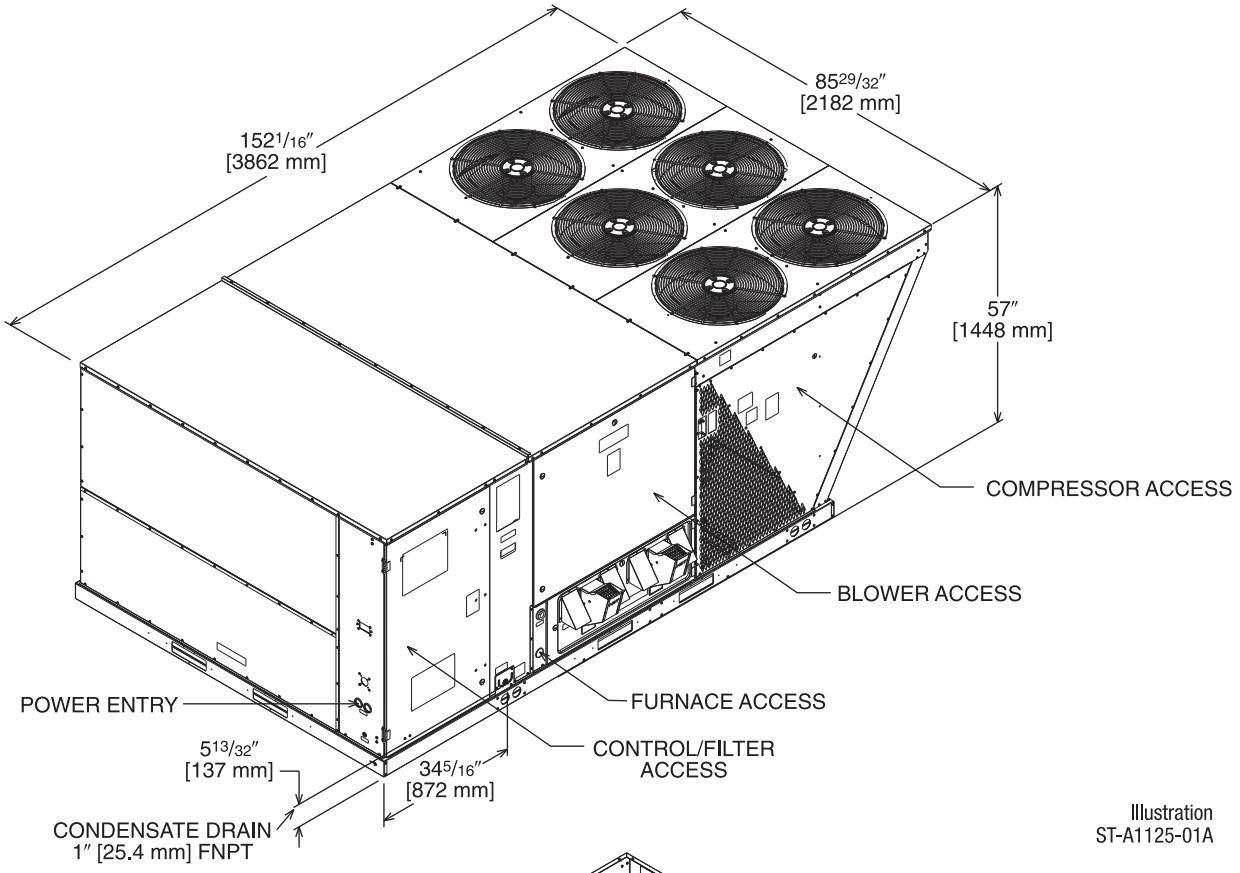

Illustration
ST-A1125-01A

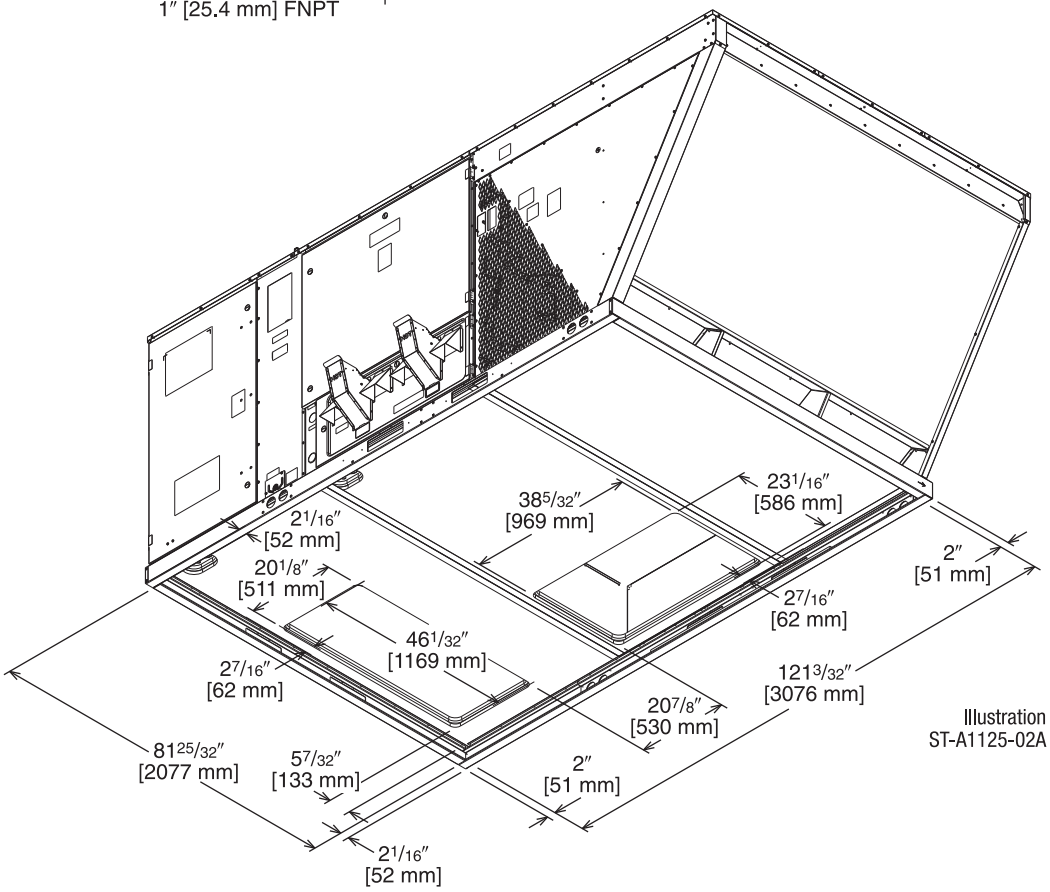

BOTTOM VIEW

Illustration
ST-A1125-02A

[ ] Designates Metric Conversions

SUPPLY AND RETURN DIMENSIONS FOR HORIZONTAL APPLICATIONS

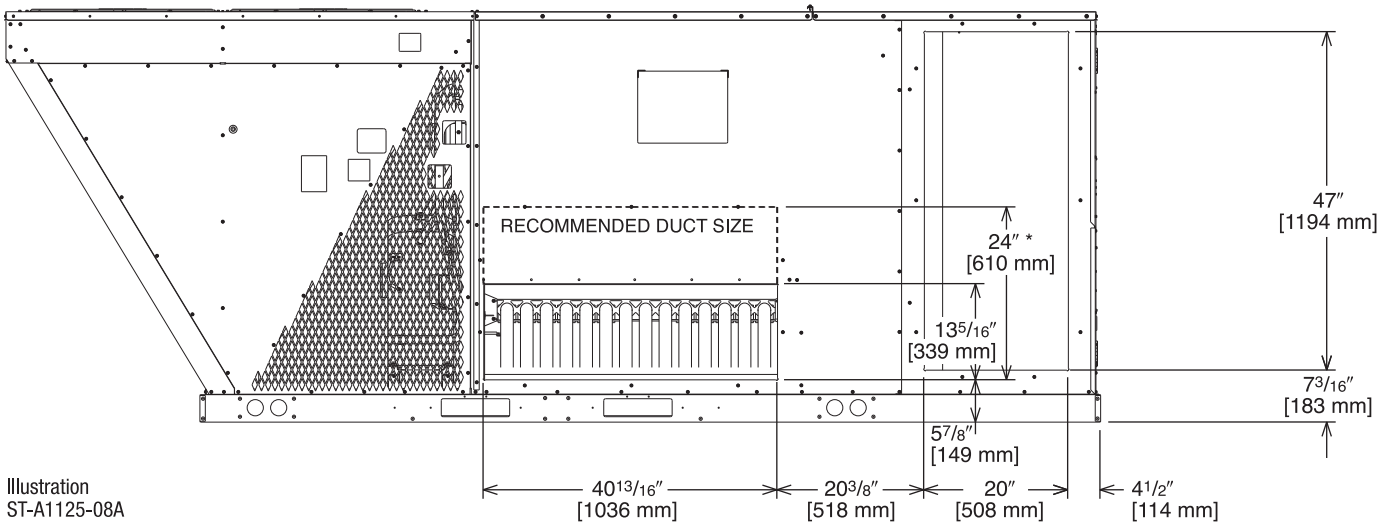

Illustration
ST-A1125-08A

* RECOMMENDED DUCT CONNECTION SIZE

DUCT SIDE VIEW (REAR)

SUPPLY AND RETURN DIMENSIONS FOR DOWNFLOW APPLICATIONS

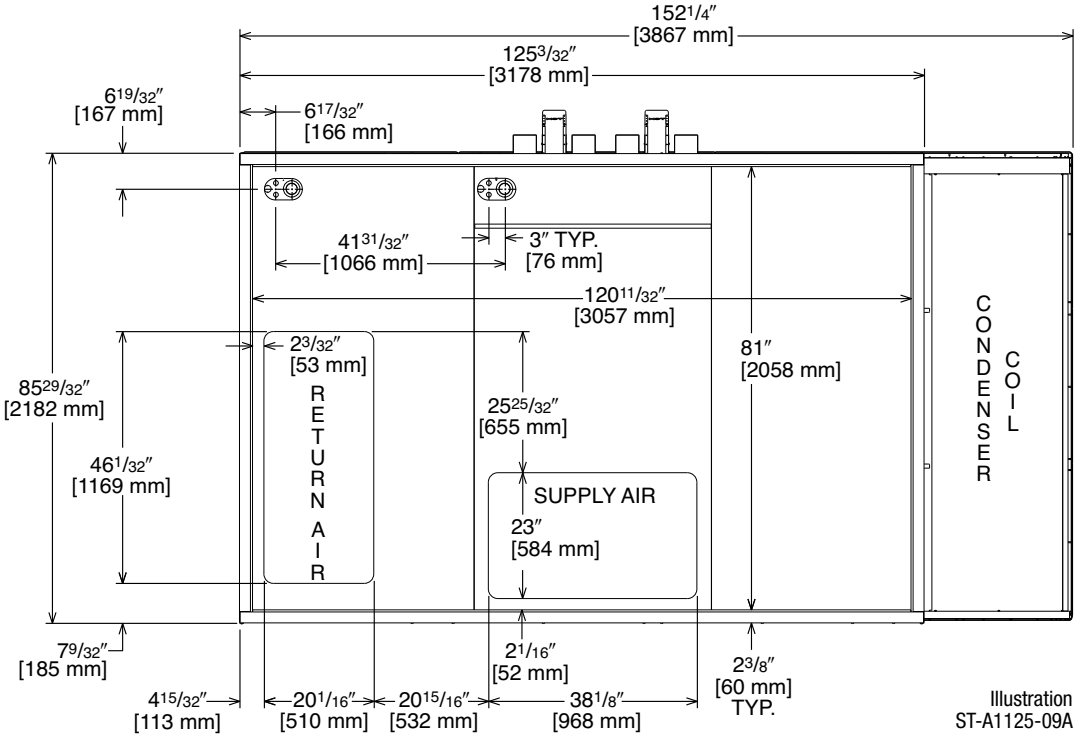

Illustration
ST-A1125-09A

BOTTOM VIEW

[ ] Designates Metric Conversions

UNIT DIMENSIONS GAS HEAT / ELECTRIC COOLING PACKAGE

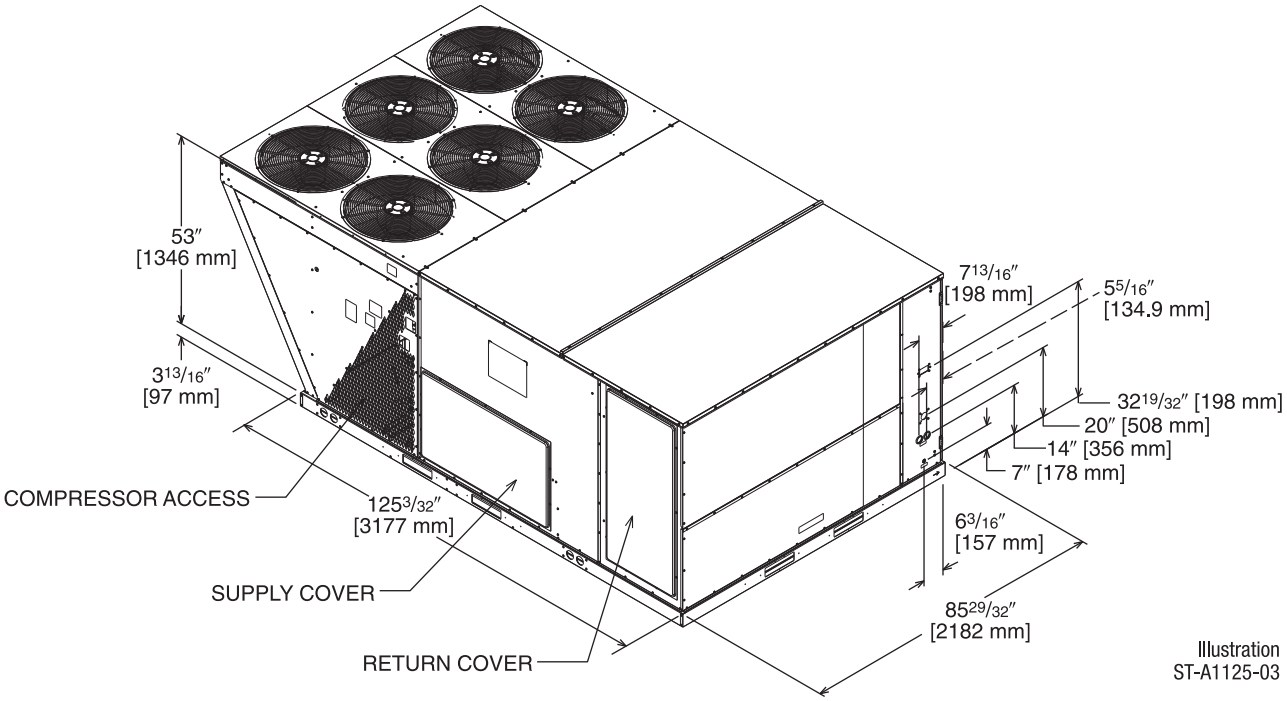

Illustration
ST-A1125-03

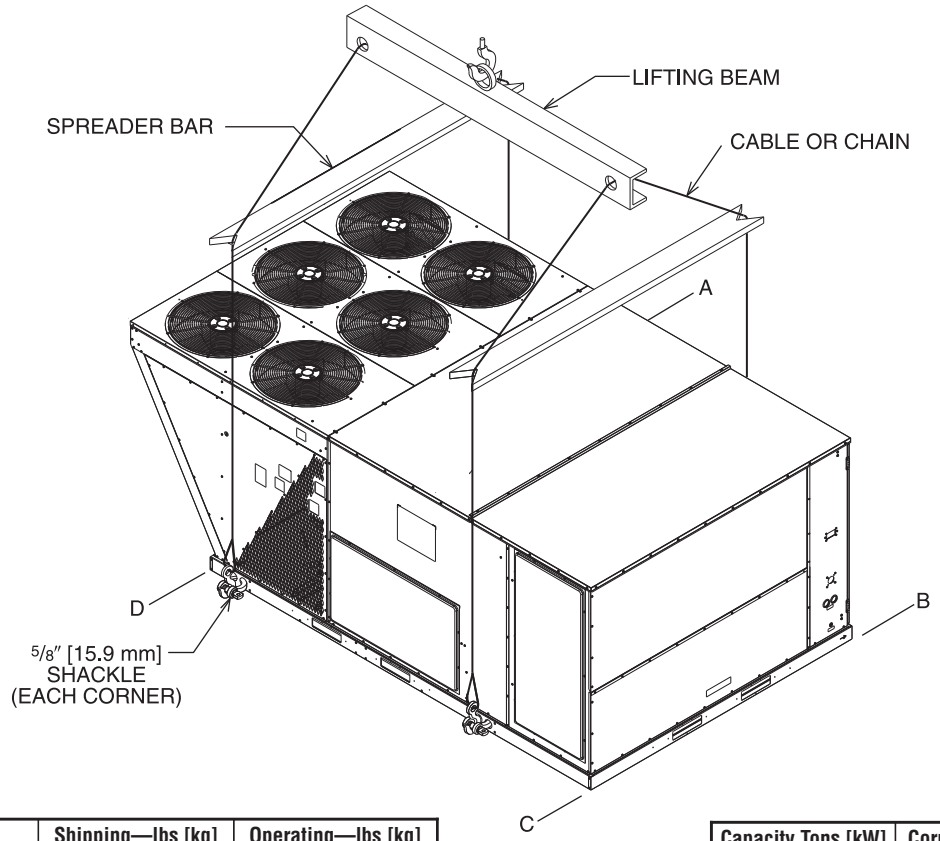

WEIGHTS

Accessory	Shipping—lbs [kg]	Operating—lbs [kg]
Economizer—Downflow	155 [70.31]	146 [66.22]
Economizer—Horizontal	165 [74.80]	155 [70.31]
Fresh Air Damper (Manual)	51 [23.13]	40 [18.14]
Fresh Air Damper (Motorized)	46 [20.87]	35 [15.88]
Roof Curb 14"	170 [77.11]	164 [74.39]

[ ] Designates Metric Conversions

Capacity Tons [kW]	Corner Weights by Percentage			
	A	B	C	D
15-25 [52.8-87.9]	32%	27%	16%	24%

Corner weights measured at base of unit.

SLAB INSTALLATION

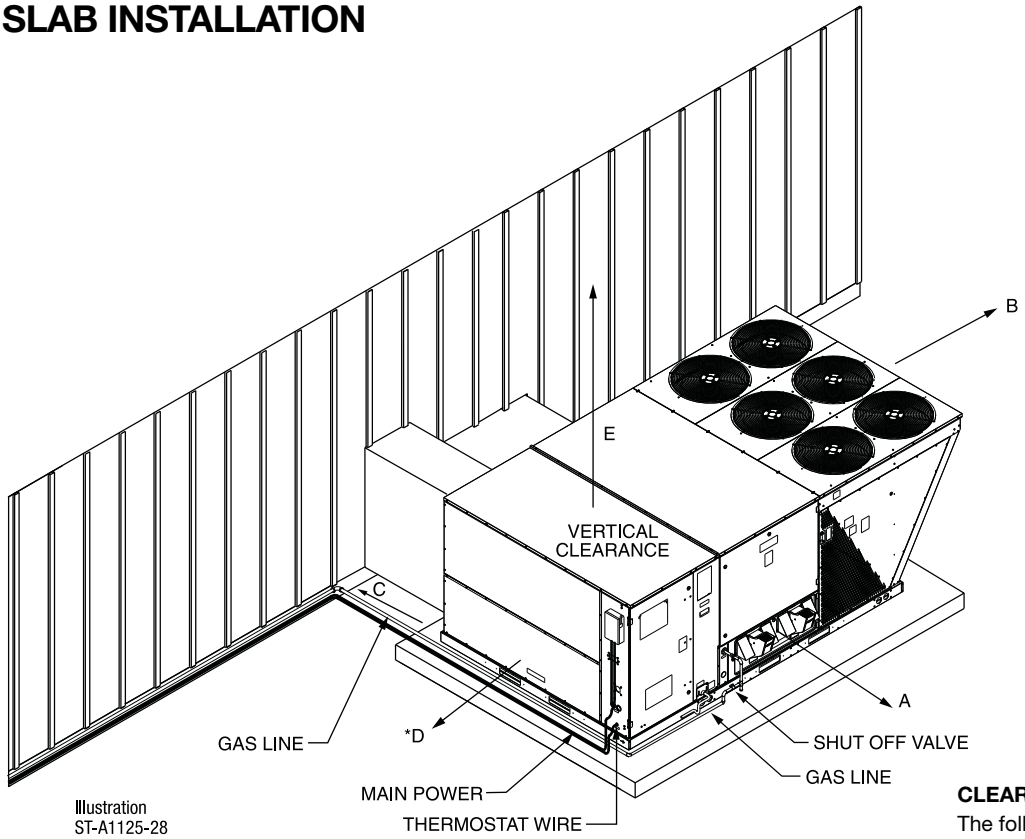

Illustration
ST-A1125-28

CLEARANCES

The following minimum clearances are recommended for proper unit performance and serviceability.

Recommended Clearance In. [mm]	Location
80 [2032]	A - Front
18 [457]	B - Condenser Coil
+18 [457]	+C - Duct Side
*18 [457]	*D - Evaporator End
60 [1524]	E - Above
*Without Economizer. 48" [1219 mm] With Economizer +Without Horizontal Economizer, 42" [1067 mm] with Horizontal Economizer	

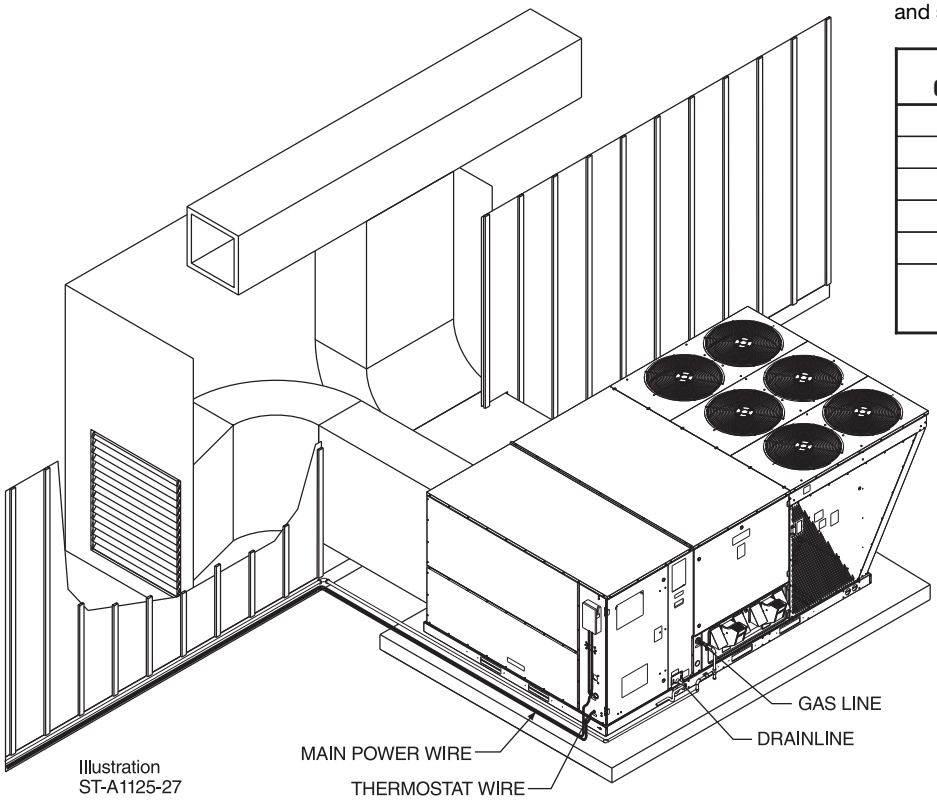

Illustration
ST-A1125-27

[ ] Designates Metric Conversions

FIELD INSTALLED ACCESSORY EQUIPMENT

Accessory	Model Number	Shipping Weight Lbs. [kg]	Installed Weight Lbs. [kg]	Factory Installation Available?
Thermostat	See Thermostat Specification Sheet (T11-001)			No
Downflow Economizer w/Single Enthalpy (DDC)	AXRD-PMCM3	277 [125.6]	168 [76.2]	Yes
Downflow Economizer w/Smoke Detector (DDC)	AXRD-SMCM3	280 [127.0]	171 [77.6]	Yes
Dual Enthalpy Kit	RXRX-AV03	1 [.5]	.5 [0.2]	No
Horizontal Economizer w/Single Enthalpy (DDC)	AXRD-RMCM3	333 [151.0]	301 [36.5]	No
Carbon Dioxide Sensor (Wall Mount)	RXRX-AR02	3 [1.4]	2 [1.0]	No
Power Exhaust (208/230V)	RXRX-BGF05C	119 [54.0]	59 [26.8]	No
Power Exhaust (460V)	RXRX-BGF05D	119 [54.0]	59 [26.8]	No
Power Exhaust (575V)	RXRX-BGF05Y	119 [54.0]	59 [26.8]	No
Manual Fresh Air Damper*	AXRF-KFA1	61 [27.7]	52 [23.6]	No
Motorized Kit for Manual Fresh Air Damper*	RXRX-AW03	42 [19.1]	35 [15.9]	No
Modulating Motor Kit w/position feedback for RXRF-KFA1	RXRX-AW05	45 [20.4]	38 [17.2]	No
Roofcurb, 14"	RXKG-CBH14	184 [83.5]	176 [79.8]	No
Roofcurb Adapter to RXRK-E56	RXRX-CJCE56	465 [210.9]	415 [88.2]	No
Roofcurb Adapter to RXKG-CAF14	RXRX-CJCF14	555 [251.7]	505 [29.1]	No
Concentric Diffuser (Step-Down, 18" x 36")	RXRN-AD81	310 [140.6]	157 [71.2]	No
Concentric Diffuser (Step-Down, 24" x 48")	RXRN-AD86	367 [166.5]	212 [96.2]	No
Concentric Diffuser (Step-Down, 28" x 60")	RXRN-AD88	410 [186.0]	370 [67.8]	No
Concentric Diffuser (Flush, 18" x 36")	RXRN-AD80	213 [96.6]	115 [52.2]	No
Downflow Transition (Rect. to Rect., 18" x 36")	RXMC-CJ07	81 [36.7]	74 [33.6]	No
Downflow Transition (Rect. to Rect., 24" x 48")	RXMC-CK08	81 [36.7]	74 [33.6]	No
Downflow Transition (Rect. to Rect., 28" x 60")	RXMC-CL09	81 [36.7]	74 [33.6]	No
Low-Ambient Control Kit (1 Per Compressor)	RXRZ-C02	3 [1.4]	2 [0.9]	Yes
Unwired Convenience Outlet	RXRX-AN01	2 [0.9]	1.5 [.7]	Yes
Unfused Service Disconnect+	RXRX-AP01	10 [4.5]	9 [4.1]	Yes
Comfort Alert (1 per compressor)	RXRX-AZ01	3 [1.4]	2 [0.9]	Yes
BACnet Communication Card	RXRX-AY01	1 [0.5]	1 [0.5]	No
LonWorks Communication Card	RXRX-AY02	1 [0.5]	1 [0.5]	No
Hail Guard Louvers	AXRX-AAD01L	55 [24.8]	45 [20.3]	Yes

*Motorized Kit and Manual Fresh Air Damper must be combined for a complete Motorized Outside Air Damper Selection.
+Do not use on or RKNL-C 300C voltage models.

[ ] Designates Metric Conversions

THERMOSTATS

200-Series *
Programmable

300-Series *
Deluxe
Programmable

400-Series *
Special Applications/
Programmable

500-Series *
Communicating/
Programmable

Brand		Descripter (3 Characters)	Series (3 Characters)	System (2 Characters)	Type (2 Characters)
RHC	**-**	**TST**	**213**	**UN**	**MS**
RHC=Rheem		TST=Thermostat	200=Programmable 300=Deluxe Programmable 400=Special Applications/ Programmable 500=Communicating/ Programmable	GE=Gas/Electric UN=Universal (AC/HP/GE) MD=Modulating Furnace DF=Dual Fuel CM=Communicating	SS=Single-Stage MS=Multi-Stage

** Photos are representative. Actual models may vary.*

For detailed thermostat match-up information, see specification sheet form number T11-001.

FLUSH MOUNT ROOM TEMPERATURE SENSORS FOR NETWORKED DDC APPLICATIONS

ROOM TEMPERATURE SENSOR RHC-ZNS1
with TIMED OVERRIDE BUTTON

10kΩ room temperature sensor transmits room temperature to DDC system. Timed override button allows tenant to change from unoccupied temperature setpoint to occupied temperature setpoint for a preset time.

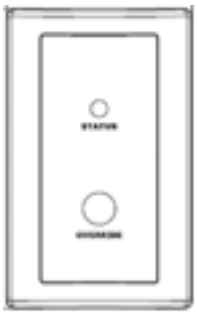

ROOM TEMPERATURE SENSOR RHC-ZNS2
with TIMED OVERRIDE BUTTON and STATUS INDICATOR

10kΩ room temperature sensor transmits room temperature to DDC system. Timed override button allows tenant to change from unoccupied temperature setpoint to occupied temperature setpoint for a preset time. Status Indicator Light transmits ALARM flash code to occupied space.

ROOM TEMPERATURE SENSOR RHC-ZNS3
with SETPOINT ADJUSTMENT and TIMED OVERRIDE BUTTON

10kΩ room temperature sensor with setpoint adjustment transmits room temperature to DDC system along with desired occupied room temperature setpoint. Timed override button allows tenant to change from unoccupied temperature setpoint to occupied temperature setpoint for a preset time.

COMMUNICATION CARDS
Field Installed

BACnet® COMMUNICATION CARD RXRX-AY01

The field installed BACnet® Communication Card allows the RTU-C unit controller to communicate with a third party building management system that supports the BACnet Application Specific Controller device profile. The BACnet® Communication Module plugs onto the unit RTU-C controller and allows communication between the RTU-C and the BACnet MSTP network.

LonWorks® COMMUNICATION CARD RXRX-AY02

The field installed LonWorks® Communication Card allows the RTU-C unit controller to communicate with a third party building management system that supports the LonMark Space Comfort Controller (SCC) functional profile or LonMark Discharge Air Controller (DAC) functional profile. The LonMark Communication Module plugs onto the RTU-C controller and allows communication between the RTU-C and a LonWorks Network.

ECONOMIZERS

Use to Select Factory Installed Options Only

AXRD-PMCM3—Single Enthalpy (Outdoor) with DDC
AXRD-SMCM3—Single Enthalpy (Outdoor) with Smoke Detector and DDC
RXRX-AV03—Dual Enthalpy Upgrade Kit
RXRX-AR02—Optional Wall-Mounted CO_2 Sensor

- Features **Honeywell** Controls
- Available Factory Installed or Field Accessory
- Gear Driven Direct Drive Actuator
- Fully Modulating (0-100%)
- Low Leakage Dampers
- Slip-In Design for Easy Installation
- Plug-In Polarized 12-pin and 4-pin Electrical Connections
- Pre-Configured—No Field Adjustments Necessary
- Standard Barometric Relief Damper
- Single Enthalpy with Dual Enthalpy Upgrade Kit Available
- CO_2 Input Sensor Available
- Field Assembled Hood Ships with Economizer
- Economizer Ships Complete for Downflow Duct Application.
- Optional Remote Minimum Position Potentiometer (270 ohm) (Honeywell #S963B1136) is available from Prostock.
- Field Installed Power Exhaust Available
- If connected to a Building Automation System (BAS), all economizer functions can be viewed on the (BAS) or 16 x 2 LCD screen
- If connected to thermostat, all economizer functions can be viewed on 16 x 2 character LCD screen

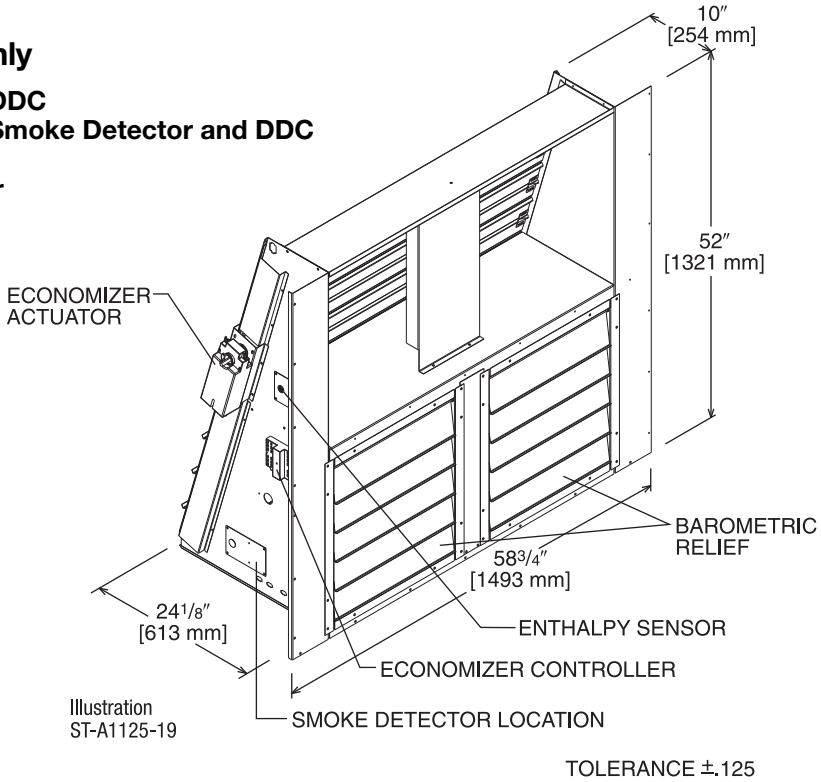

Illustration
ST-A1125-19

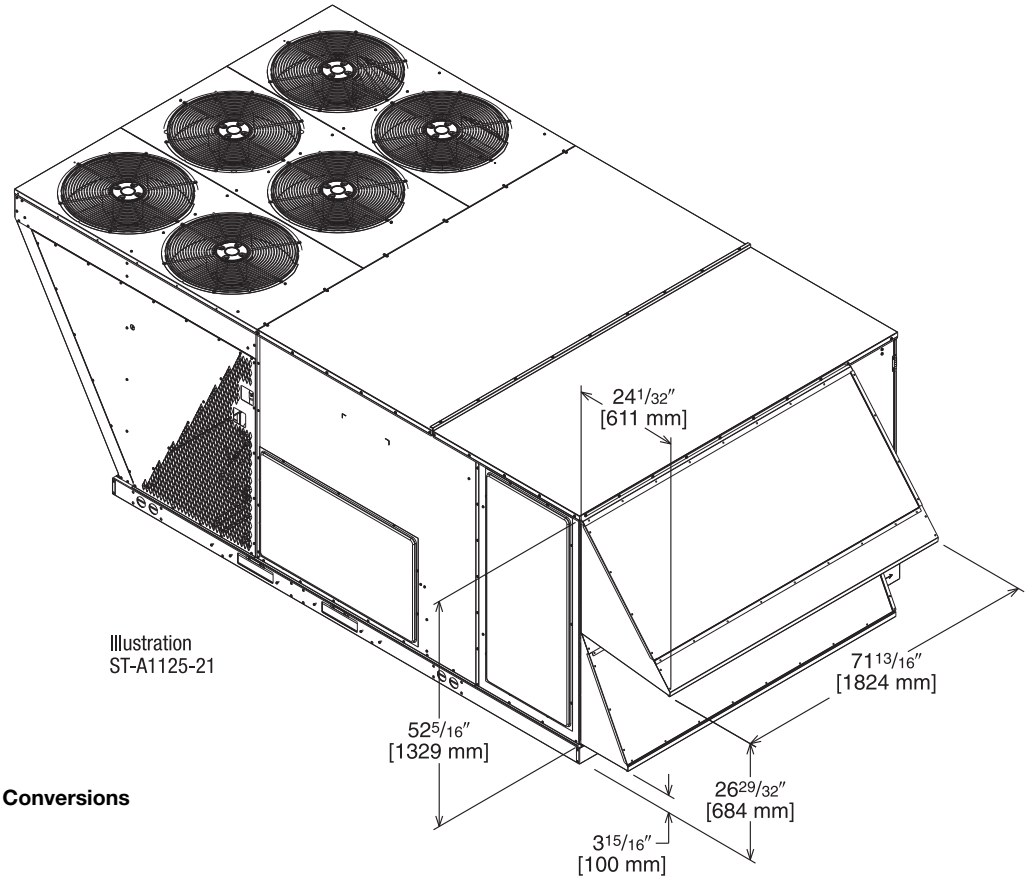

Illustration
ST-A1125-21

[ ] Designates Metric Conversions

ECONOMIZER FOR HORIZONTAL DUCT INSTALLATION

Field Installed Only

AXRD-RMCM3—Single Enthalpy (Outdoor) with DDC
RXRX-AV03—Dual Enthalpy Upgrade Kit
RXRX-AR02—Wall-mounted CO_2 Sensor

- Features **Honeywell** Controls
- Available as a Field Installed Accessory Only
- Gear Driven Direct Drive Actuator
- Fully Modulating (0-100%)
- Low Leakage Dampers
- Slip-In Design for Easy Installation
- Plug-In Polarized 12-pin and 4-pin Electrical Connections
- Pre-Configured—No Field Adjustments Necessary
- Standard Barometric Relief Damper
- Single Enthalpy with Dual Enthalpy Upgrade Kit Available
- CO_2 Input Sensor Available
- Field Assembled Hood Ships with Economizer
- Economizer Ships Complete for Horizontal Duct Application
- Optional Remote Minimum Position Potentiometer (270 ohm) (Honeywell #S963B1136) is available from Prostock
- Field Installed Power Exhaust Available
- If connected to a Building Automation System (BAS), all economizer functions can be viewed on the (BAS) or 16 x 2 LCD screen
- If connected to thermostat, all economizer functions can be viewed on 16 x 2 LCD screen

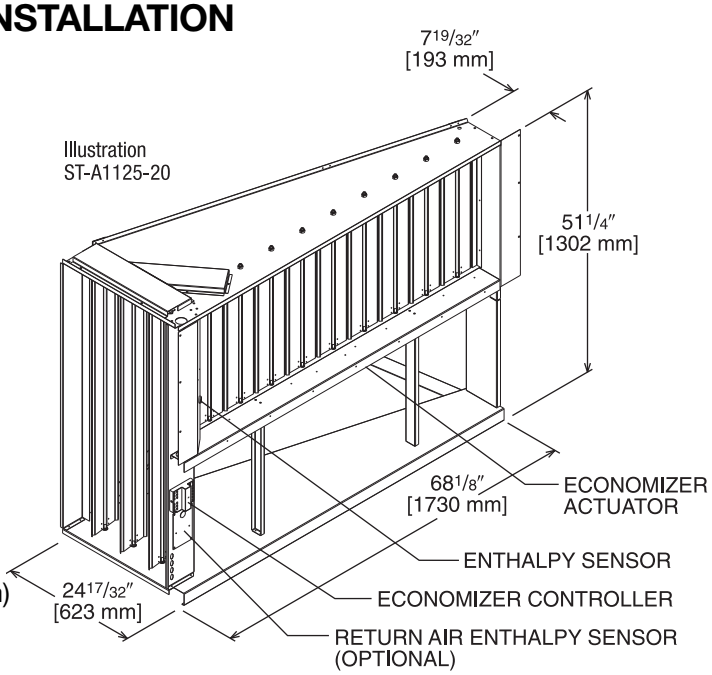

TOLERANCE ± .125

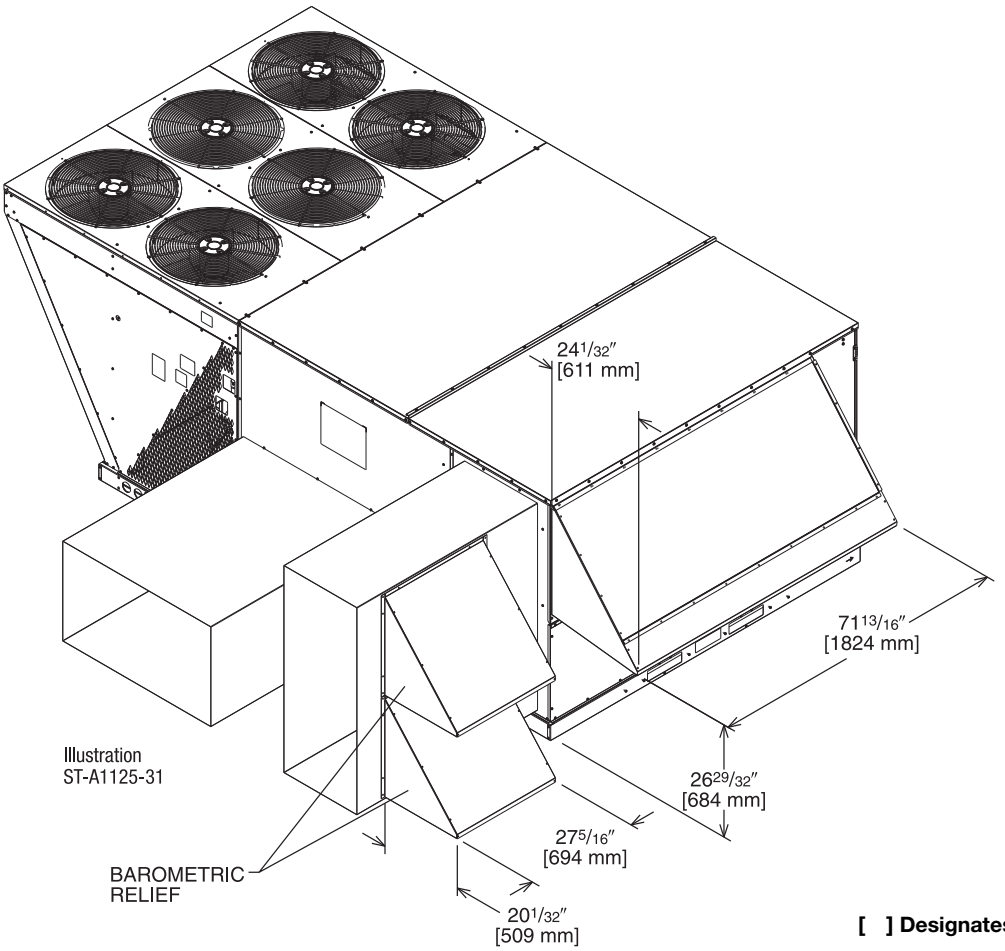

[ ] Designates Metric Conversions

POWER EXHAUST KIT FOR AXRD-PMCM3 & SMCM3 ECONOMIZERS

RXRX-BGF05 (C, D, or Y*)

***Voltage Code**

VERTICAL AIRFLOW

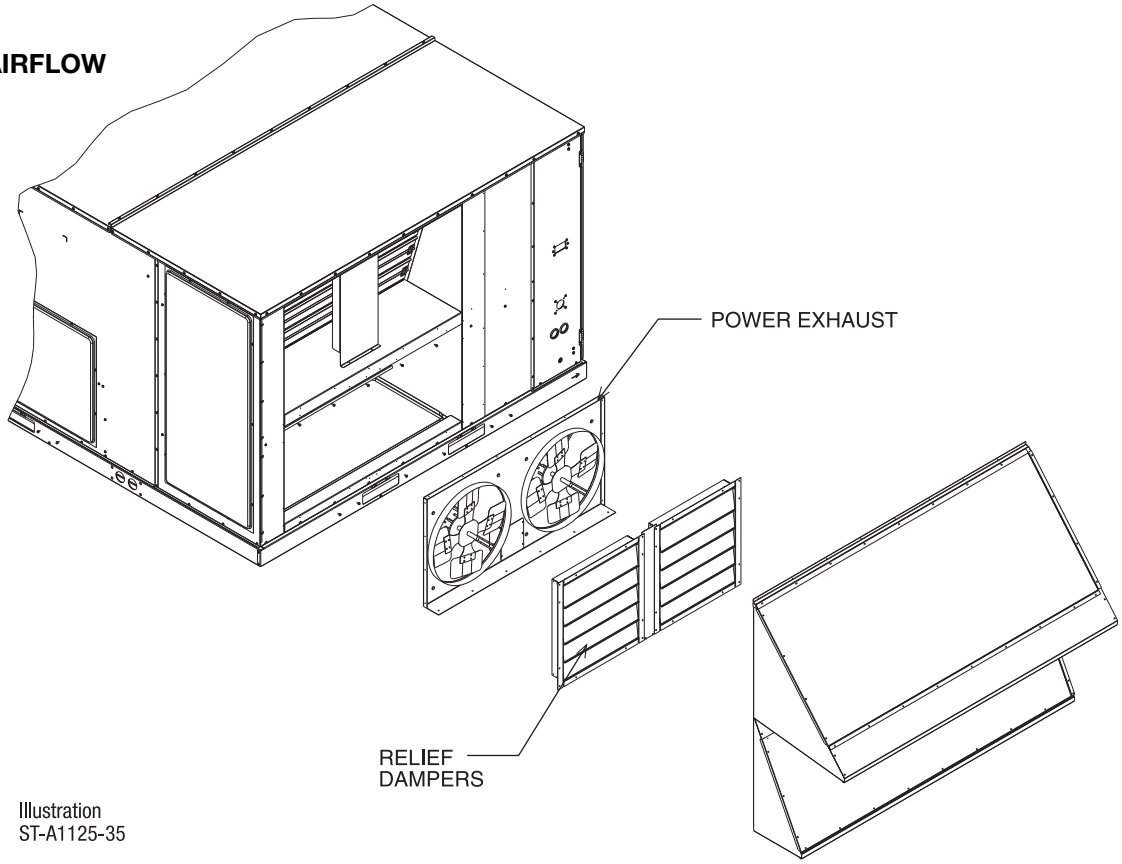

Illustration
ST-A1125-35

Model No.	No. of Fans	Volts	Phase	HP (ea.)	Low Speed		High Speed ①		FLA (ea.)	LRA (ea.)
					CFM [L/s] ②	RPM	CFM [L/s] ②	RPM		
RXRX-BGF05C	2	208-230	1	0.75	4100 [1935]	850	5200 [2454]	1050	5	4.97
RXRX-BGF05D	2	460	1	0.75	4100 [1935]	850	5200 [2454]	1050	2.2	3.4
RXRX-BGF05Y	2	575	1	0.75	4100 [1935]	850	5200 [2454]	1050	1.5	2.84

NOTES: ① Power exhaust is factory set on high speed motor tap.
② CFM is per fan at 0" w.c. external static pressure.

[ ] Designates Metric Conversions

FRESH AIR DAMPER

MOTORIZED DAMPER KIT
RXRX-AW03
(Motor Kit for AXRF-KFA1)
RXRX-AW05
(Modulating Motor Kit with position feedback for AXRF-KFA1)

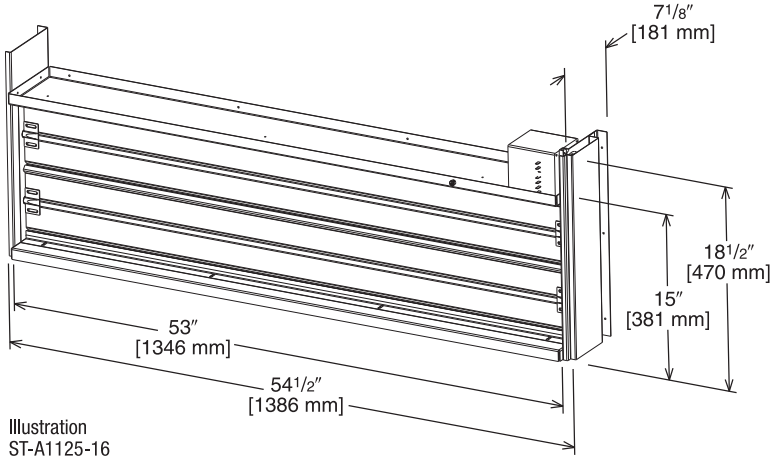

Illustration
ST-A1125-16

- Features **Honeywell** Controls
- Gear Driven Direct Drive Actuator
- Fully Modulating (0-100%)
- Low Leakage Dampers
- Slip-In Design for Easy Installation
- Plug-In Polarized 12-pin and 4-pin Electrical Connections
- Pre-Configured—No Field Adjustments Necessary
- Addition of Dual Enthalpy Upgrade Kit allows limited economizer function
- CO_2 Sensor Input Available for Demand Control Ventilation (DCV)
- Optional Remote Minimum Position Potentiometer (270 ohm) (Honeywell #S963B1136) is available from Prostock.
- All fresh air damper functions can be viewed at the RTU-C unit controller display
- If connected to a Building Automation System (BAS), all fresh air damper functions can be viewed on the (BAS), on 16 x 2 LCD screen
- If connected to thermostat, all fresh air damper functions can be viewed on 16 x 2 LCD screen

AXRF-KFA1 (Manual)
RXRX-AW03 (Motorized damper kit for manual fresh air damper)
RXRX-AW05 (Modulating damper kit with position feedback for AXRF-KFA1)

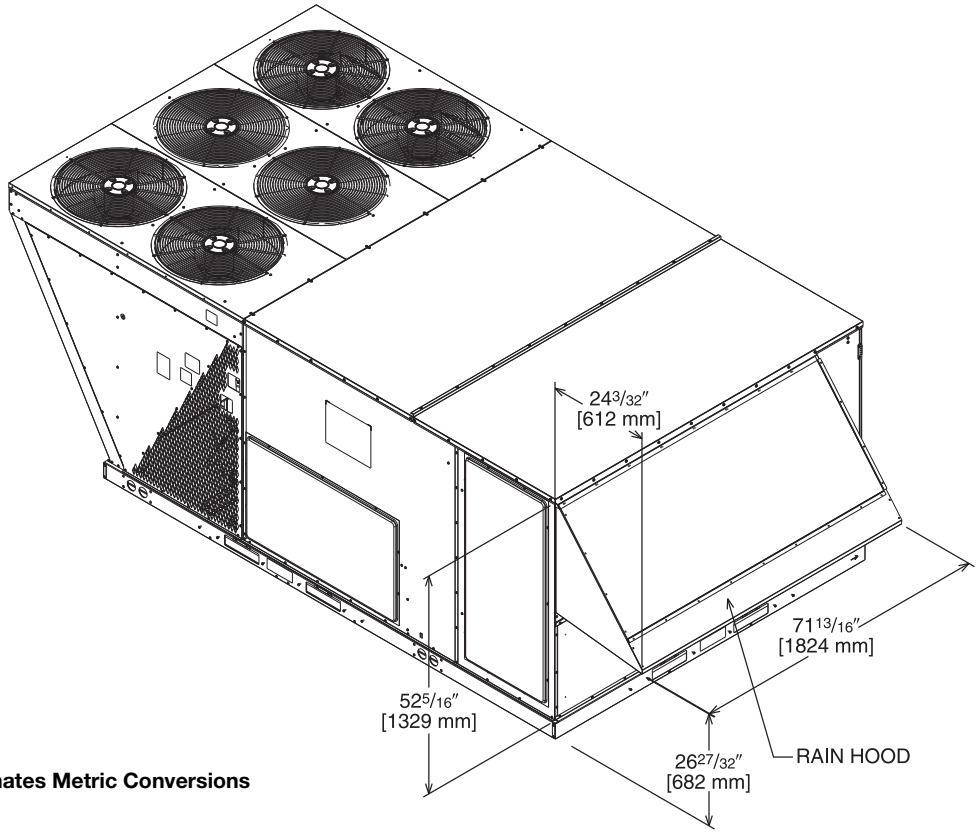

[ ] Designates Metric Conversions

Illustration
ST-A1125-17

ROOFCURBS (Full Perimeter)

- Rheem's new roofcurb designs can be utilized on 15, 17.5, 20 and 25 ton [52.8, 61.5. 70.3 and 87.9 kW] models.
- One available height (14" [356 mm]).
- Quick assembly corners for simple and fast assembly.
- 1" [25.4 mm] x 4" [102 mm] Nailer provided.
- Insulating panels not required because of insulated outdoor base pan.
- Sealing gasket (28" [711 mm]) provided with Roofcurb.
- Packaged for easy field assembly.

TYPICAL INSTALLATION

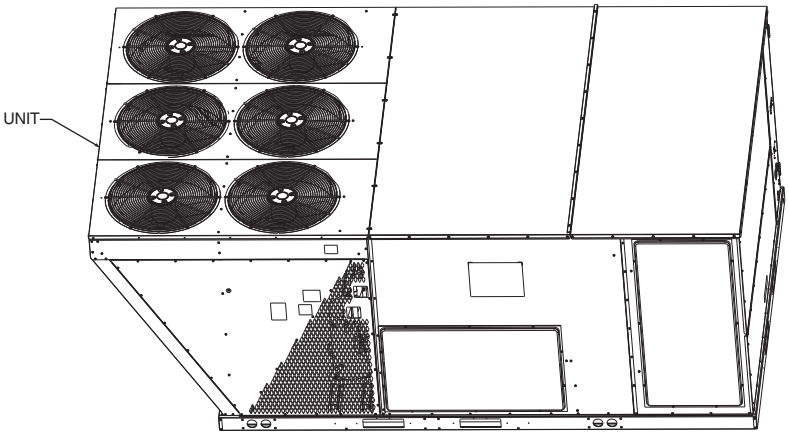

ROOFCURB ASSEMBLY

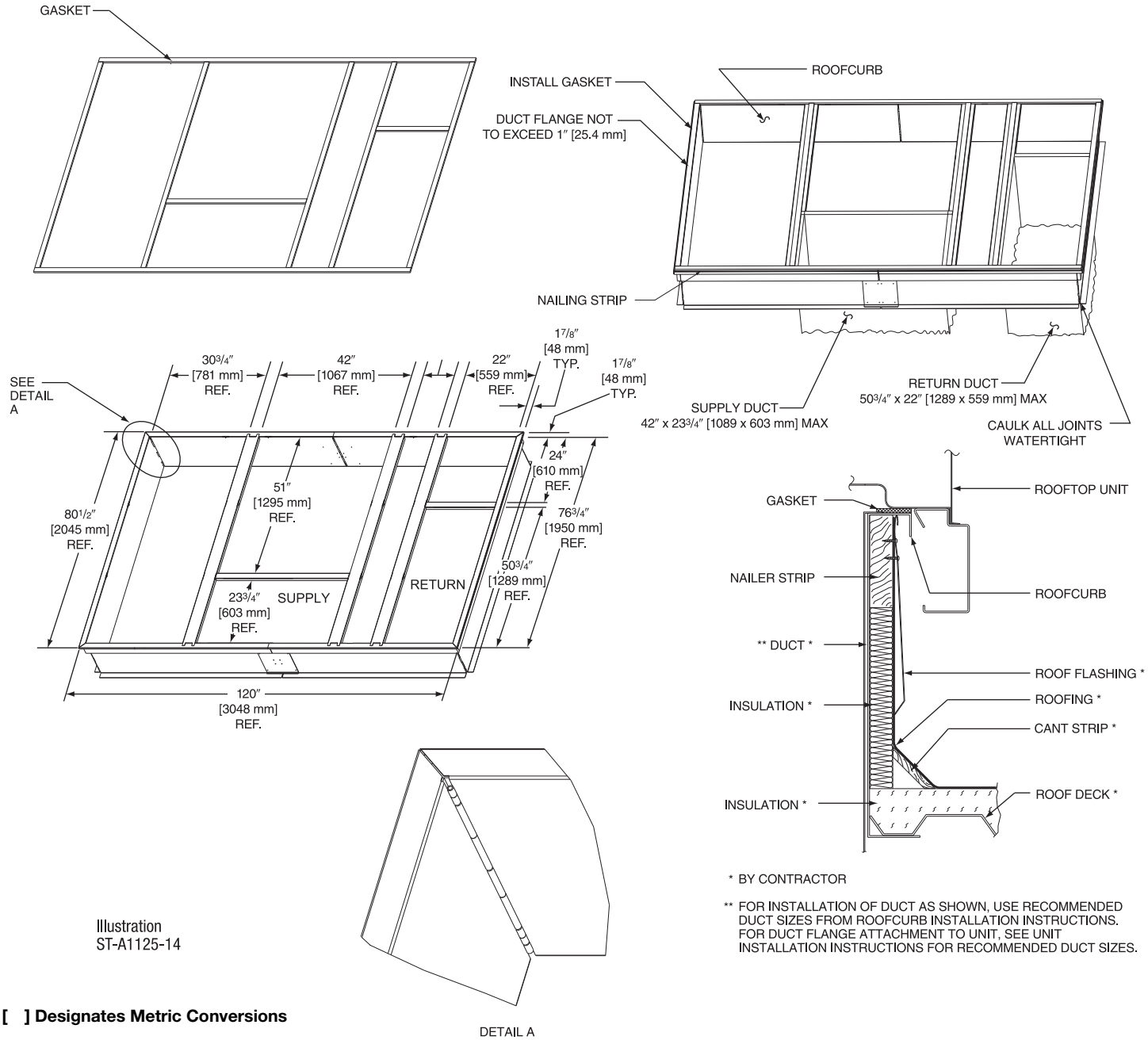

* BY CONTRACTOR

** FOR INSTALLATION OF DUCT AS SHOWN, USE RECOMMENDED DUCT SIZES FROM ROOFCURB INSTALLATION INSTRUCTIONS. FOR DUCT FLANGE ATTACHMENT TO UNIT, SEE UNIT INSTALLATION INSTRUCTIONS FOR RECOMMENDED DUCT SIZES.

Illustration
ST-A1125-14

[ ] Designates Metric Conversions

ROOFCURB ADAPTER

OLD MODELS	OLD CURB MODEL	ROOFCURB ADAPTER	NEW MODEL
COMMERCIAL CABINET (12.5, 15 & 20 TON) ([44, 52.8 & 70.3 kW]) (-)RCF, (-)RGF, (-)REF →	RXRK-E56 →	RXRX-CJCE56 →	RKNL (15, 17.5, 20 & 25 TON) ([52.8, 61.5, 70.3 & 87.9 kW])

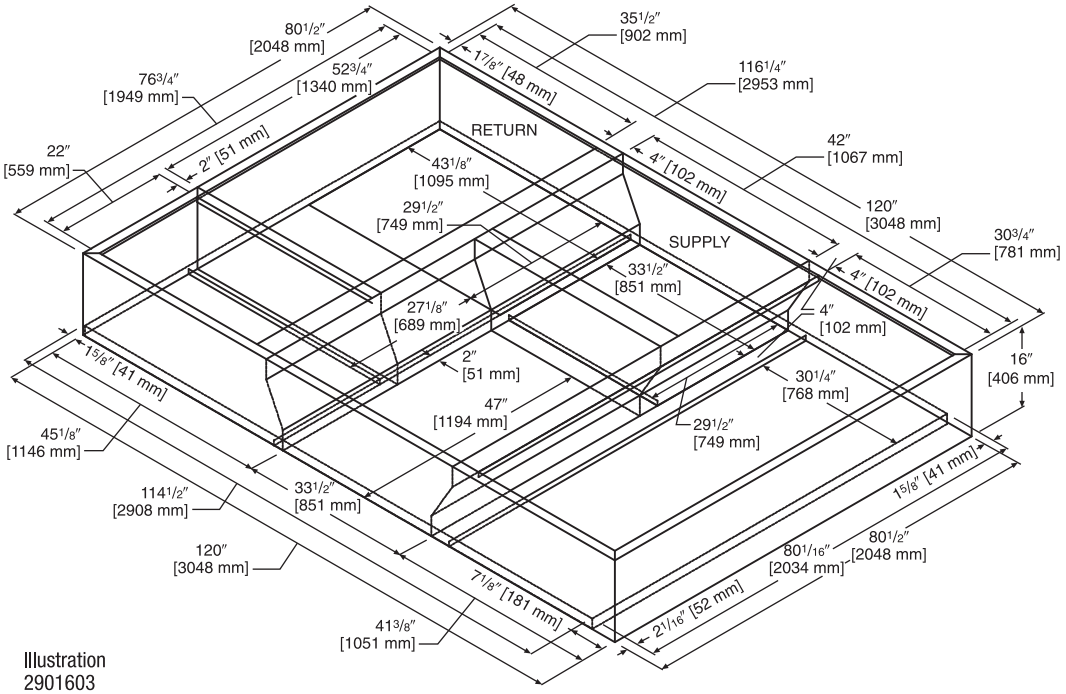

Illustration 2901603

COMMERCIAL CABINET (15, 20 & 25 TON) ([52.8, 70.3, 87.9 kW]) (-)KKB, (-)KMB, (-)KNB →	RXKG-CAF14 →	RXRX-CJCF14 →	RKNL (15, 17.5, 20 & 25 TON) ([52.8, 61.5, 70.3 & 87.9 kW])

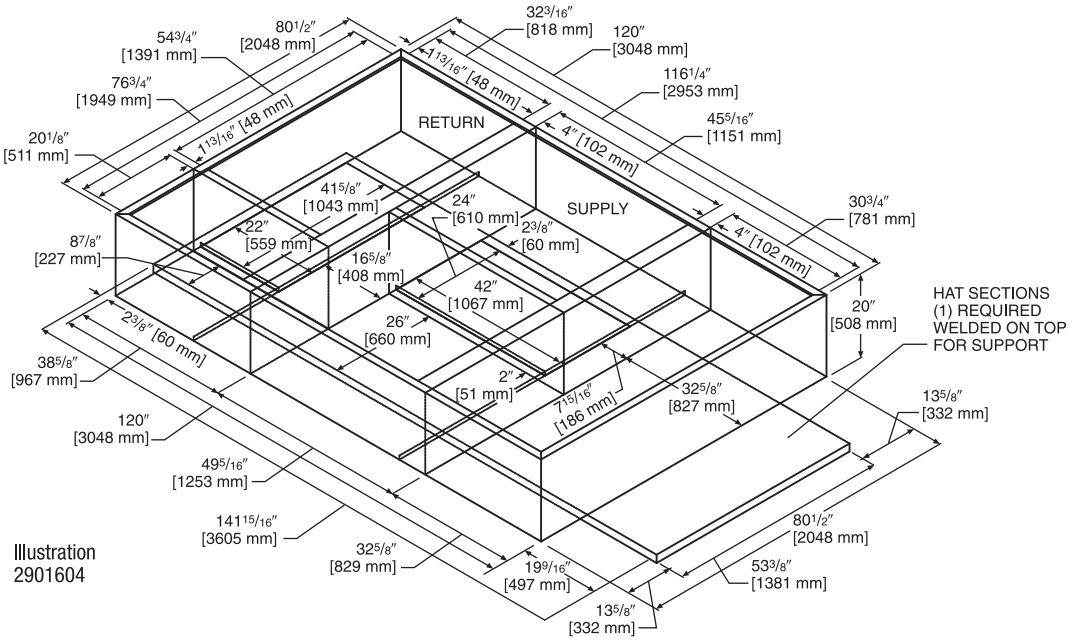

Illustration 2901604

[ ] Designates Metric Conversions

CONCENTRIC DIFFUSER APPLICATION

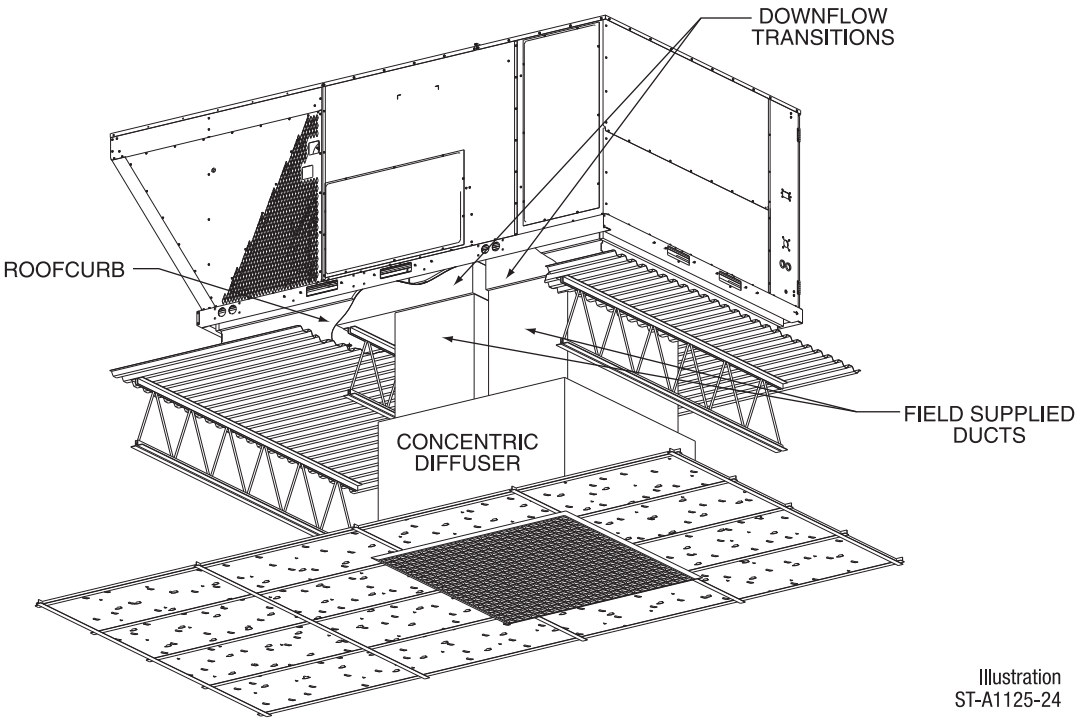

Illustration
ST-A1125-24

DOWNFLOW TRANSITION DRAWINGS

RXMC-CJ07 (15 Ton) [52.8 kW]

- Used with RXRN-AD80 and RXRN-AD81 Concentric Diffusers.

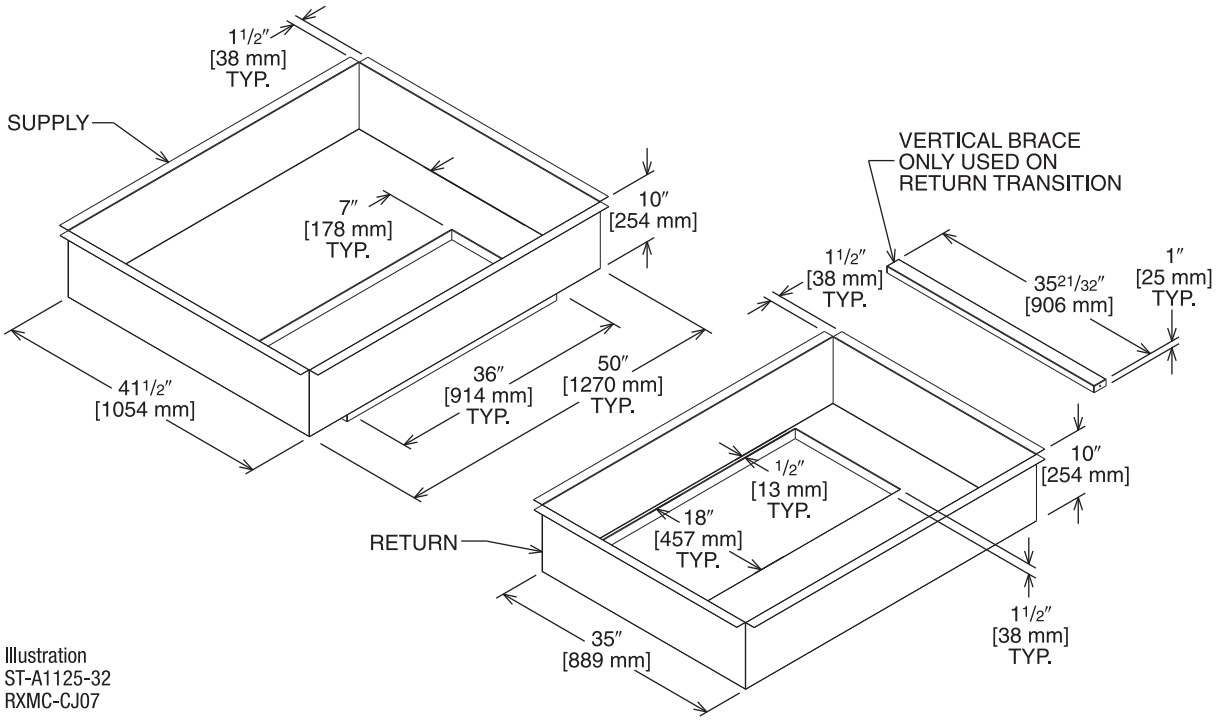

Illustration
ST-A1125-32
RXMC-CJ07

[ ] Designates Metric Conversions

DOWNFLOW TRANSITION DRAWINGS (Cont.)

RXMC-CK08 (20 Ton) [70.3 kW]

- Used with RXRN-AD86 Concentric Diffusers.

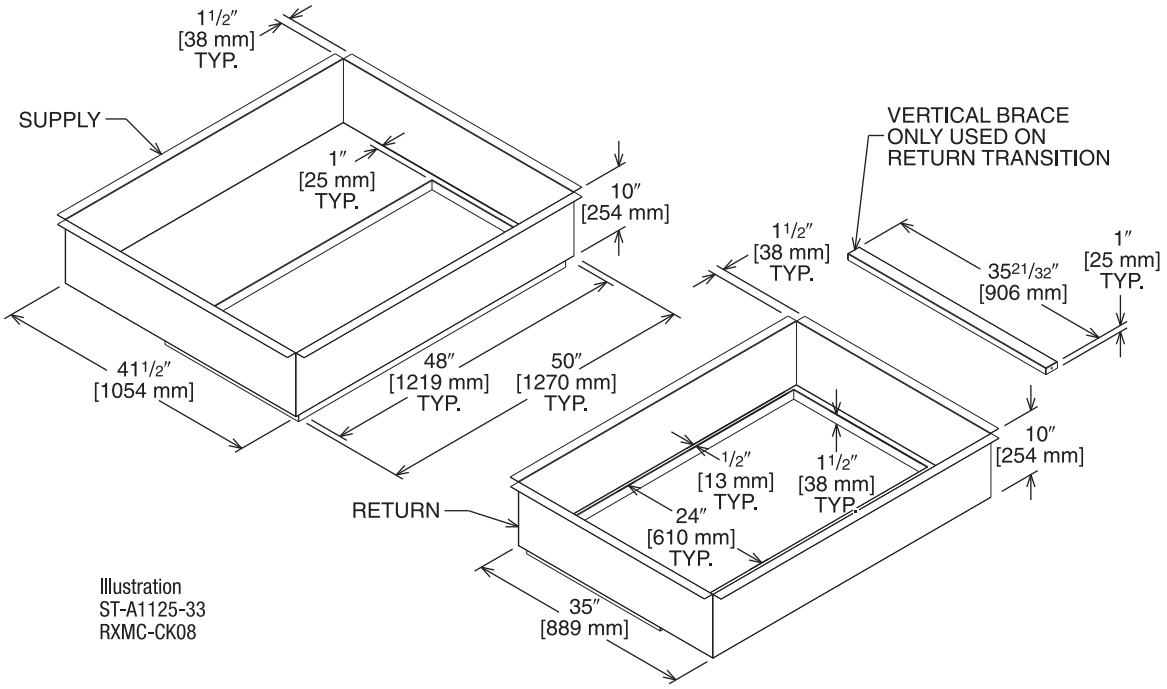

Illustration
ST-A1125-33
RXMC-CK08

RXMC-CL09 (25 Ton) [87.9 kW]

- Used with RXRN-AD88 Concentric Diffusers.

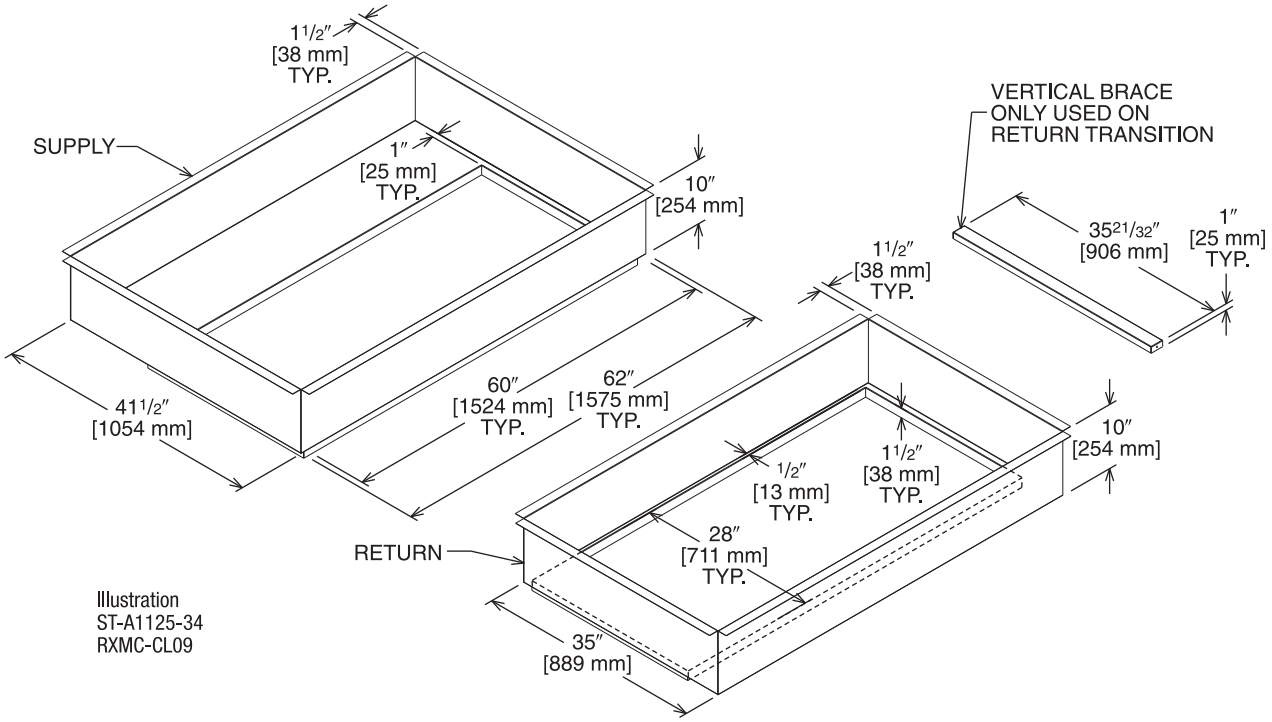

Illustration
ST-A1125-34
RXMC-CL09

[ ] Designates Metric Conversions

CONCENTRIC DIFFUSER RXRN-AD80 SERIES 15 TON [52.8 kW] FLUSH

- All aluminum diffuser with aluminum return air eggcrate.
- Built-in anti-sweat gasket.
- Molded fiberglass supports.
- Built-in hanging supports.
- Diffuser box constructed of sheetmetal insulated with 1" [25.4 mm] 1.5 lbs. [.7 kg] duct liner.

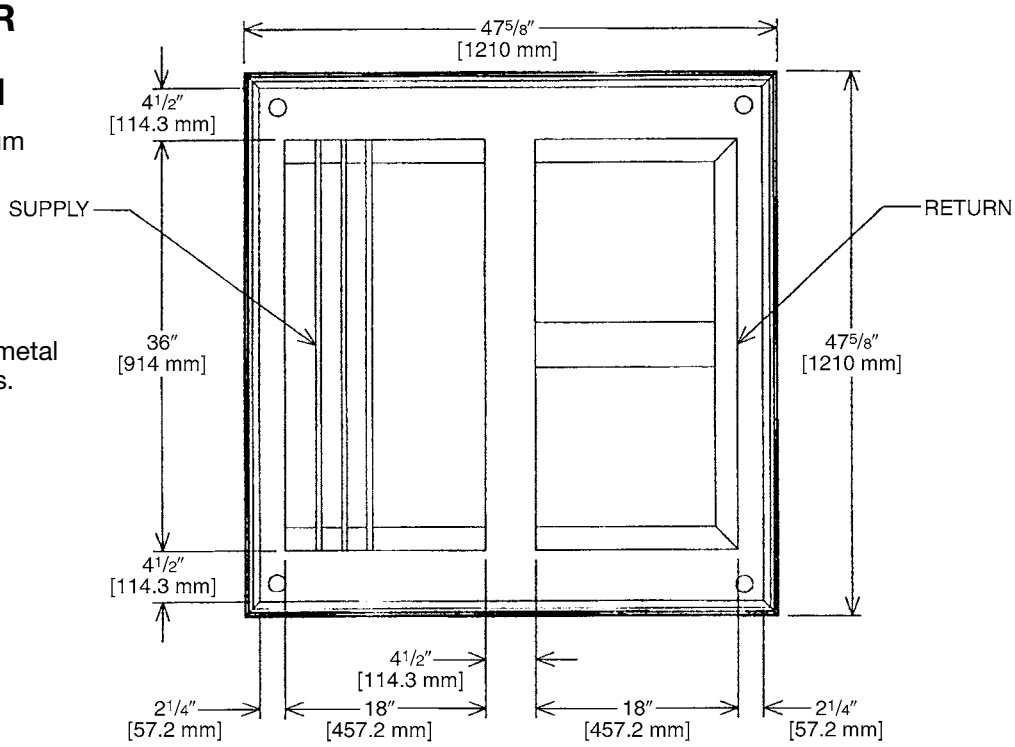

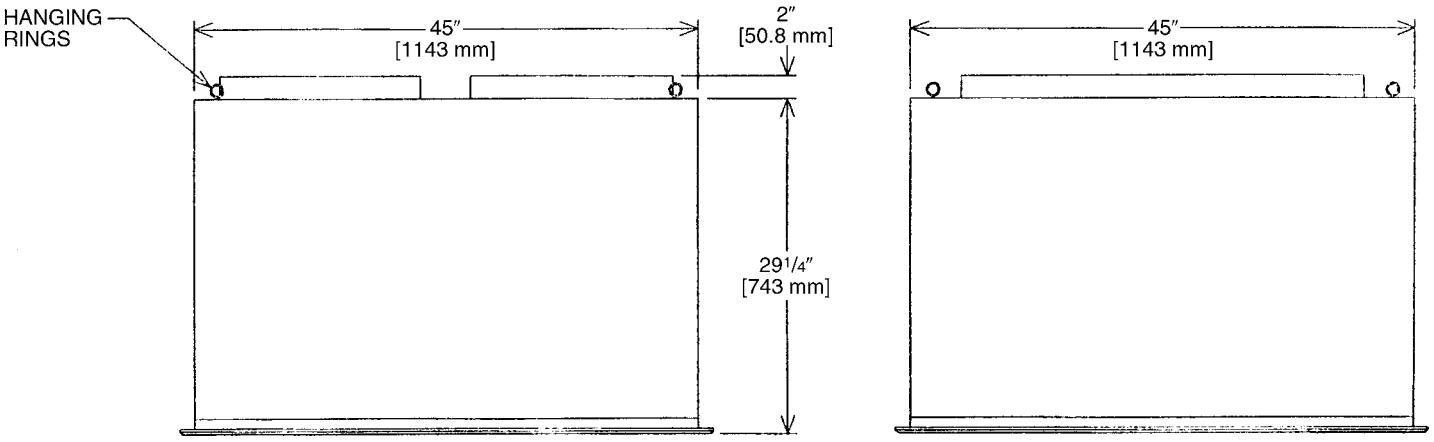

CONCENTRIC DIFFUSER SPECIFICATIONS

PART NUMBER	CFM [L/s]	STATIC PRESSURE	THROW FEET	NECK VELOCITY	JET VELOCITY
RXRN-AD80	5600 [2643]	0.36	28-37	1000	2082
	5800 [2737]	0.39	29-38	1036	2156
	6000 [2832]	0.42	40-50	1071	2230
	6200 [2926]	0.46	42-51	1107	2308
	6400 [3020]	0.50	43-52	1143	2379
	6600 [3115]	0.54	45-56	1179	2454

[ ] Designates Metric Conversions

CONCENTRIC DIFFUSER RXRN-AD81 SERIES 15 TON [52.8 kW] STEP DOWN

- All aluminum diffuser with aluminum return air eggcrate.
- Built-in anti-sweat gasket.
- Molded fiberglass supports.
- Built-in hanging supports.
- Diffuser box constructed of sheetmetal insulated with 1" [25.4 mm] 1.5 lbs. [.7 kg] duct liner.
- Double deflection diffuser with the blades secured by spring steel.

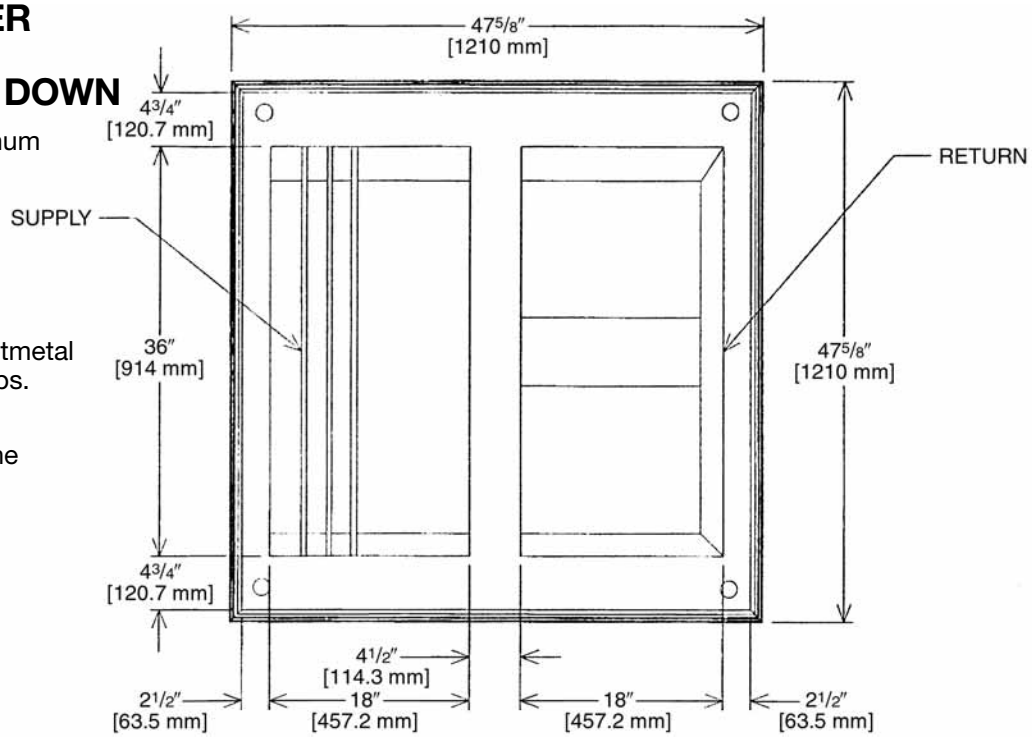

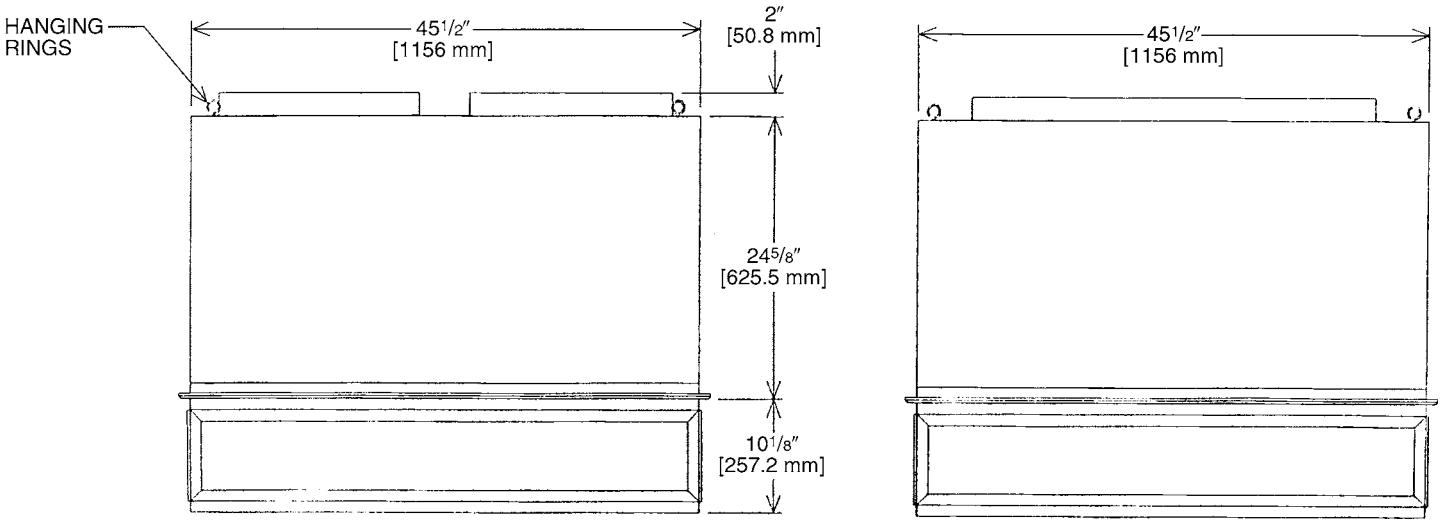

CONCENTRIC DIFFUSER SPECIFICATIONS

PART NUMBER	CFM [L/s]	STATIC PRESSURE	THROW FEET	NECK VELOCITY	JET VELOCITY
RXRN-AD81	5600 [2643]	0.36	39-49	920	920
	5800 [2737]	0.39	42-51	954	954
	6000 [2832]	0.42	44-54	1022	1022
	6200 [2926]	0.46	45-55	1056	1056
	6400 [3020]	0.50	46-55	1090	1090
	6600 [3115]	0.54	47-56	1124	1124

[ ] Designates Metric Conversions

CONCENTRIC DIFFUSER RXRN-AD86 SERIES 20 TON [70.3 kW] STEP DOWN

- All aluminum diffuser with aluminum return air eggcrate.
- Built-in anti-sweat gasket.
- Molded fiberglass supports.
- Built-in hanging supports.
- Diffuser box constructed of sheetmetal insulated with 1" [25.4 mm] 1.5 lbs. [.7 kg] duct liner.
- Double deflection diffuser with the blades secured by spring steel.

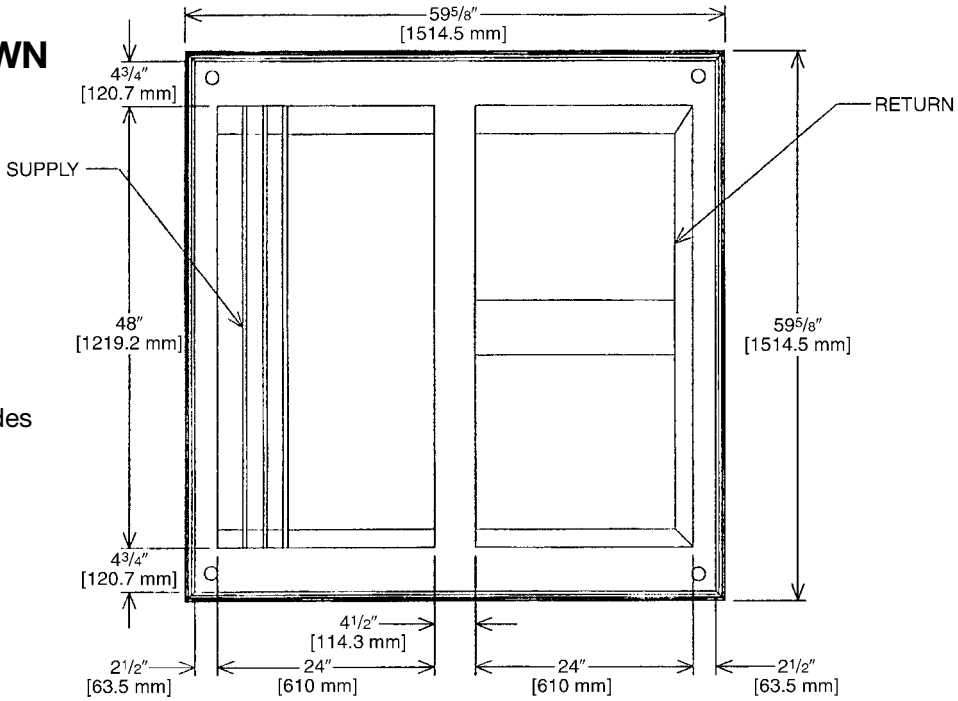

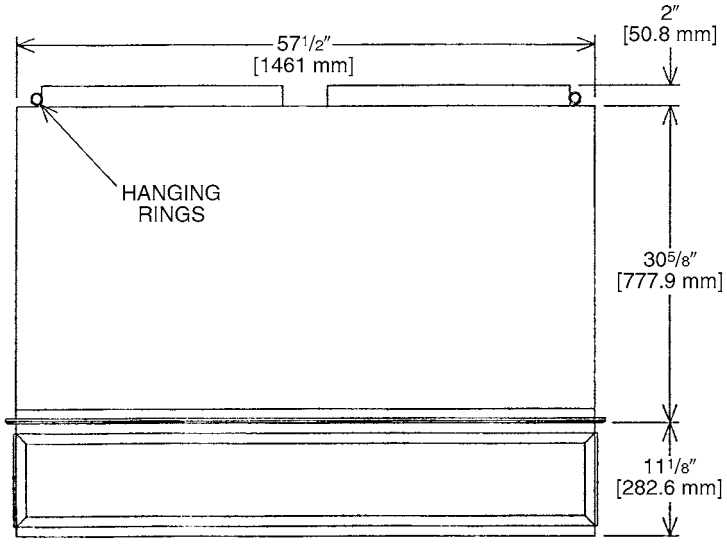

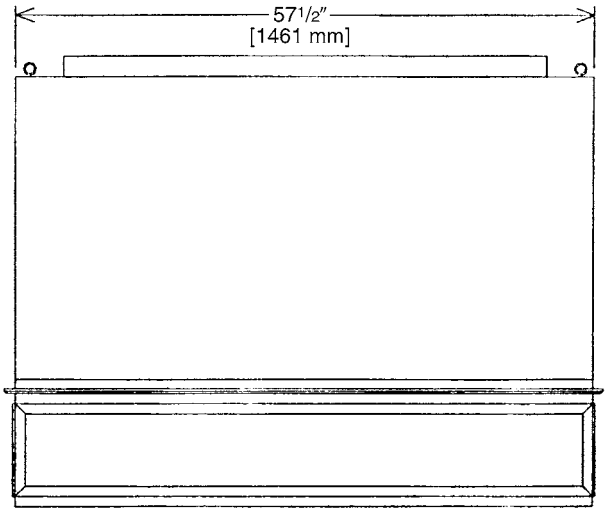

CONCENTRIC DIFFUSER SPECIFICATIONS

PART NUMBER	CFM [L/s]	STATIC PRESSURE	THROW FEET	NECK VELOCITY	JET VELOCITY
RXRN-AD86	7200 [3398]	0.39	33-38	827	827
	7400 [3492]	0.41	35-40	850	850
	7600 [3587]	0.43	36-41	873	873
	7800 [3681]	0.47	38-43	896	896
	8000 [3776]	0.50	39-44	918	918
	8200 [3870]	0.53	41-46	941	941
	8400 [3964]	0.56	43-49	964	964
	8600 [4059]	0.59	44-50	987	987
	8800 [4153]	0.63	47-55	1010	1010

[ ] Designates Metric Conversions

CONCENTRIC DIFFUSER RXRN-AD88 SERIES 25 TON [87.9 kW] STEP DOWN

- All aluminum diffuser with aluminum return air eggcrate.
- Built-in anti-sweat gasket.
- Molded fiberglass supports.
- Built-in hanging supports.
- Diffuser box constructed of sheetmetal insulated with 1" [25.4 mm] 1.5 lbs. [.7 kg] duct liner.
- Double deflection diffuser with the blades secured by spring steel.

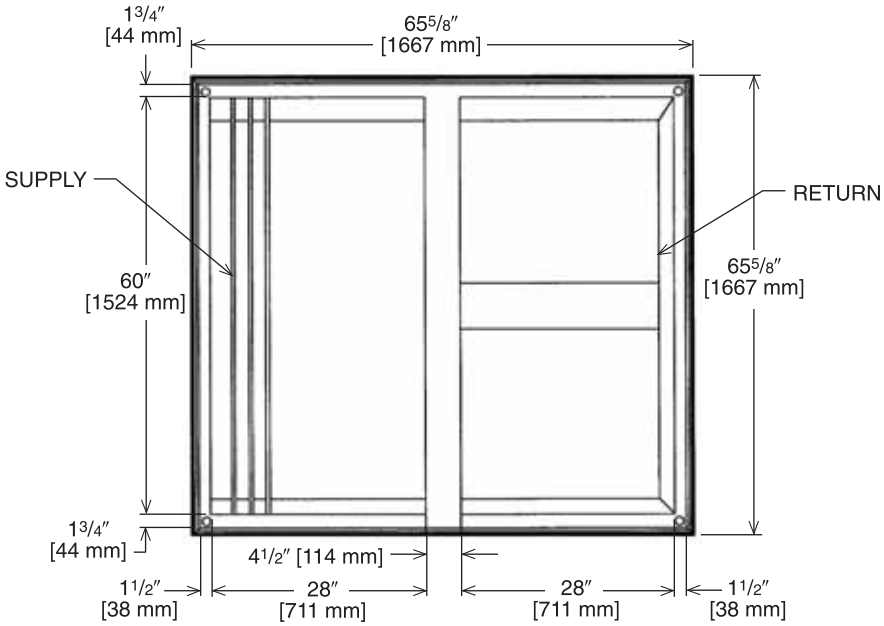

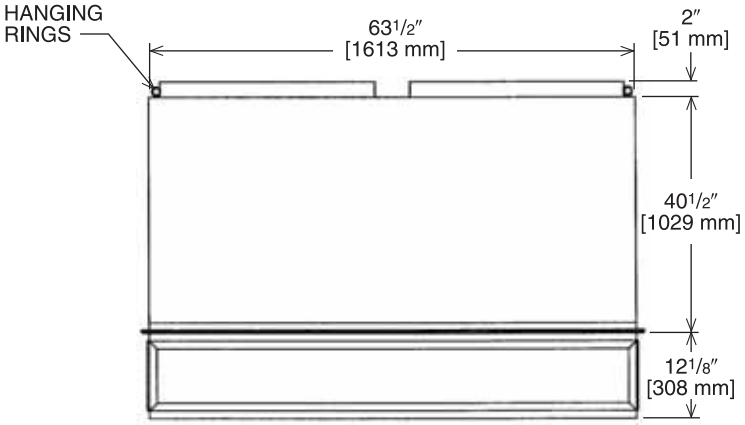

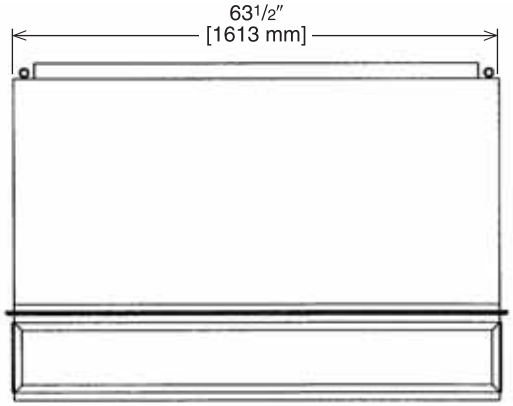

CONCENTRIC DIFFUSER SPECIFICATIONS

PART NUMBER	CFM [L/s]	STATIC PRESSURE	THROW FEET	NECK VELOCITY	JET VELOCITY
RXRN-AD88	10000 [4719]	0.51	46-54	907	907
	10500 [4955]	0.58	50-58	953	953
	11000 [5191]	0.65	53-61	998	998
	11500 [5427]	0.73	55-64	1043	1043
	12000 [5663]	0.82	58-67	1089	1089
	12500 [5898]	0.91	61-71	1134	1134
	13000 [6134]	1.00	64-74	1179	1179

[ ] Designates Metric Conversions

Guide Specifications RKNL-C/H 180 thru C/H300

You may copy this document directly into your building specification. This specification is written to comply with the 2004 version of the "master format" as published by the Construction Specification Institute. www.csinet.org.

GAS HEAT PACKAGED ROOFTOP

HVAC Guide Specifications

Size Range: 15 to 25 Nominal Tons

Section Description

23 06 80 Schedules for Decentralized HVAC Equipment

23 06 80.13 Decentralized Unitary HVAC Equipment Schedule

23 06 80.13.A. Rooftop unit schedule

1. Schedule is per the project specification requirements.

23 07 16 HVAC Equipment Insulation

23 07 16.13 Decentralized, Rooftop Units:

1. Interior cabinet surfaces shall be insulated with a minimum 3/4-in. thick, minimum 1-1/2 lb density, flexible fiberglass insulation bonded with a phenolic binder, with aluminum foil facing on the air side.
2. Insulation and adhesive shall meet NFPA 90A requirements for flame spread and smoke generation.

23 09 13 Instrumentation and Control Devices for HVAC

23 09 13.23 Sensors and Transmitters

23 09 13.23.A. Thermostats

1. Thermostat must
   a. have capability to energize 2 different stages of cooling, and 2 different stages of heating.
   b. must include capability for occupancy scheduling.

23 09 23 Direct-digital Control system for HVAC

23 09 23.13 Decentralized, Rooftop Units:

23 09 23.13.A. RTU-C controller

1. Shall be ASHRAE 62-2001 compliant.
2. Shall accept 18-32VAC input power.
3. Shall have an operating temperature range from -40ºF (-40ºC) to 158ºF (70ºC), 10% - 95% RH (non-condensing).
4. Controller shall accept the following inputs: space temperature, setpoint adjustment, outdoor air temperature, indoor air quality, outdoor air enthalpy, fire shutdown, return air enthalpy, fan status, remote time clock/door switch.
5. Shall accept a CO_2 sensor in the conditioned space, and be Demand Control Ventilation (DCV) ready.
6. Shall provide the following outputs: Economizer, fan, cooling stage 1, cooling stage 2, heat stage 1, heat stage 2, heat stage 3/ exhaust/ occupied.
7. Unit shall provide surge protection for the controller through a circuit breaker.
8. Shall have a field installed communication card allowing the unit to be Internet capable, and communicate at a Baud rate of 19.2K or faster
9. Shall have an LED display independently showing the status of activity on the communication bus, and processor operation.
10. Shall have either a field installed BACnet® plug-in communication card which includes an EIA-485 protocol communication port, or a field installed LonWorks™ plug-in communications card.
11. Software upgrades will be accomplished by local download. Software upgrades through chip replacements are not allowed.
12. Shall be shock resistant in all planes to 5G peak, 11ms during operation, and 100G peak, 11ms during storage.
13. Shall be vibration resistant in all planes to 1.5G @ 20-300 Hz.
14. Shall support a bus length of 4000 ft max, 60 devices per 1000 ft section, and 1 RS-485 repeater per 1000 ft sections.

23 09 23.13.B. Open protocol, direct digital controller:

1. Shall be ASHRAE 62-2001 compliant.
2. Shall accept 18-30VAC, 50-60Hz, and consume 15VA or less power.
3. Shall have an operating temperature range from -40ºF (-40ºC) to 130ºF (54ºC), 10% - 90% RH (non-condensing).
4. Shall have either a field installed BACnet® plug-in communication card which includes an EIA-485 protocol communication port, or a field installed LonWorks™ plug-in communications card.
5. The BACnet® plug in communication card shall include built-in protocol for BACNET (MS/TP and PTP modes)
6. The LonWorks™ plug in communication card shall include the Echelon processor required for all Lon applications.
7. Shall allow access of up sto 62 network variables (SNVT). Shall be compatible with all open controllers
8. Baud rate Controller shall be selectable through the EIA-485 protocol communication port.
9. Shall have an LED display independently showing the status of serial communication, running, errors, power, all digital outputs, and all analog inputs.
10. Shall accept the following inputs: space temperature, setpoint adjustment, outdoor air temperature, indoor air quality, outdoor air enthalpy, compressor lock-out, fire shutdown, enthalpy switch, and fan status/filter status/ humidity/ remote occupancy.

11. Shall provide the following outputs: economizer, fan, cooling stage 1, cooling stage 2, heat stage 1, heat stage 2, heat stage 3/ exhaust.
12. Software upgrades will be accomplished by either local or remote download. No software upgrades through chip replacements are allowed.

23 09 33 Electric and Electronic Control System for HVAC

23 09 33.13 Decentralized, Rooftop Units:

23 09 33.13.A. General:

1. Shall be complete with self-contained low-voltage control circuit protected by a resettable circuit breaker on the 24-v transformer side. Transformer shall have 100VA capabilities.
2. Shall utilize color-coded wiring.
3. The heat exchanger shall be controlled by an integrated furnace controller (IFC) microprocessor. See heat exchanger section of this specification.
4. Shall include a central control terminal board to conveniently and safely provide connection points for vital control functions such as: smoke detectors, phase monitor, economizer, thermostat, DDC control options, loss of charge, freeze sensor, high pressure switches.
5. Unit shall include a minimum of one 10-pin screw terminal connection board for connection of control wiring.

23 09 33.23.B. Safeties:

1. Compressor over-temperature, over current.
2. Loss of charge switch.
   a. Units with 2 compressors shall have different colored wires for the circuit 1 and circuit 2 low and high pressure switches.
   b. Loss of charge switch shall use different color wire than the high pressure switch. The purpose is to assist the installer and service technician to correctly wire and or troubleshoot the rooftop unit.
   c. Loss of charge switch shall have a different sized connector than the high pressure switch. They shall physically prevent the cross-wiring of the safety switches between the high and low pressure side of the system.
3. High-pressure switch.
   a. Units with 2 compressors shall have different colored wires for the circuit 1 and circuit 2 low and high pressure switches.
   b. High pressure switch shall use different color wire than the low pressure switch. The purpose is to assist the installer and service person to correctly wire and or troubleshoot the rooftop unit.
   c. High pressure switch shall have a different sized connector than the loss of charge switch. They shall physically prevent the cross-wiring of the safety switches between the high and low pressure side of the system.
4. Freeze protection sensor, evaporator coil.
5. Automatic reset, motor thermal overload protector.
6. Heating section shall be provided with the following minimum protections.
   a. High-temperature limit switches.
   b. Induced draft motor pressure switch.
   c. Flame rollout switch.
   d. Flame proving controls.

23 09 93 Sequence of Operations for HVAC Controls

23 09 93.13 Decentralized, Rooftop Units:

23 40 13 Panel Air Filters

23 40 13.13 Decentralized, Rooftop Units:

23 40 13.13.A. Standard filter section shall

1. Shall consist of factory-installed, low velocity, throwaway 2-in. thick fiberglass filters of commercially available sizes.
2. Unit shall use only one filter size. Multiple sizes are not acceptable.
3. Filter face velocity shall not exceed 365 fpm at nominal airflows.
4. Filters shall be accessible through an access panel as described in the unit cabinet section of the specification (23 81 19.13.H).

23 81 19 Self-Contained Air Conditioners

23 81 19.13 Small-Capacity Self-Contained Air Conditioners

23 81 19.13.A. General

1. Outdoor, rooftop mounted, electrically controlled, heating and cooling unit utilizing a(n) hermetic scroll compressor(s) for cooling duty and gas combustion for heating duty.
2. Factory assembled, single-piece heating and cooling rooftop unit. Contained within the unit enclosure shall be all factory wiring, piping, controls, and special features required prior to field start-up.
3. Unit shall use environmentally safe, R-410A refrigerant.
4. Unit shall be installed in accordance with the manufacturer's instructions.
5. Unit must be selected and installed in compliance with local, state, and federal codes.

23 81 19.13.B. Quality Assurance

1. Unit meets ASHRAE 90.1-2004 minimum efficiency requirements.
2. 3 phase units are Energy Star qualified.
3. Unit shall be rated in accordance with AHRI Standards 210 and 360.
4. Unit shall be designed to conform to ASHRAE 15, 2001.
5. Unit shall be UL-tested and certified in accordance with ANSI Z21.47 Standards and UL-listed and certified under Canadian standards as a total package for safety requirements.
6. Insulation and adhesive shall meet NFPA 90A requirements for flame spread and smoke generation.
7. Unit casing shall be capable of withstanding 500-hour salt spray exposure per ASTM B117 (scribed specimen).
8. Unit casing shall be capable of withstanding Federal Test Method Standard No. 141 (Method 6061) 5000-hour salt spray.
9. Unit shall be designed in accordance with ISO 9001:2000, and shall be manufactured in a facility registered by ISO 9001:2000.
10. Roof curb shall be designed to conform to NRCA Standards.
11. Unit shall be subjected to a completely automated run test on the assembly line. The data for each unit will be stored at the factory, and must be available upon request.
12. Unit shall be designed in accordance with UL Standard 1995, including tested to withstand rain.
13. Unit shall be constructed to prevent intrusion of snow and tested to prevent snow intrusion into the control box up to 40 mph.

23 81 19.13.C. Delivery, Storage, and Handling

1. Unit shall be stored and handled per manufacturer's recommendations.
2. Lifted by crane requires either shipping top panel or spreader bars.
3. Unit shall only be stored or positioned in the upright position.

23 81 19.13.E. Project Conditions

1. As specified in the contract.

23 81 19.13.F. Operating Characteristics

1. Unit shall be capable of starting and running at 115°F (46°C) ambient outdoor temperature, meeting maximum load criteria of AHRI Standard 210/240 or 360 at ± 10% voltage.
2. Compressor with standard controls shall be capable of operation down to 40°F (4°C), ambient outdoor temperatures. Accessory low ambient kit is necessary if mechanically cooling at ambient temperatures below 40°F (4°C).
3. Unit shall discharge supply air vertically or horizontally as shown on contract drawings.
4. Unit shall be factory configured for vertical supply & return configurations.
5. Unit shall be field convertible from vertical to horizontal configuration.

23 81 19.13.G. Electrical Requirements

1. Main power supply voltage, phase, and frequency must match those required by the manufacturer.

23 81 19.13.H. Unit Cabinet

1. Unit cabinet shall be constructed of galvanized steel, and shall be bonderized and coated with a baked enamel finish on all externally exposed surfaces.
2. Unit cabinet exterior paint shall be: film thickness, (dry) 0.003 inches minimum, gloss (per ASTM D523, 60°F / 16°C): 60, Hardness: H-2H Pencil hardness.
3. Evaporator fan compartment interior cabinet insulation shall conform to AHRI Standards 210 or 360 minimum exterior sweat criteria. Interior surfaces shall be insulated with a minimum 3/4-in. thick, 1 lb. density, flexible fiberglass insulation, aluminum foil-face coated on the air side.
4. Base of unit shall have locations for thru-the-base gas and electrical connections (factory installed or field installed), standard.
5. Base Rail
   a. Unit shall have base rails on all sides.
   b. Holes shall be provided in the base rails for rigging shackles to facilitate maneuvering and overhead rigging.

c. Holes shall be provided in the base rail for moving the rooftop by fork truck.
d. Base rail shall be a minimum of 14 gauge thickness.

6. Condensate pan and connections:
   a. Shall be a sloped condensate drain pan made of a non-corrosive material.
   b. Shall comply with ASHRAE Standard 62.
   c. Shall use a 1" x 11-1/2 NPT drain connection through the side of the drain pan. Connection shall be made per manufacturer's recommendations.
7. Gas Connections:
   a. All gas piping connecting to unit gas valve shall enter the unit cabinet at a single location on side of unit (horizontal plane).
   b. Thru-the-base capability
      i. Standard unit shall have a thru-the-base gas-line location using a raised, embossed portion of the unit basepan.
      ii. No basepan penetration, other than those authorized by the manufacturer, is permitted.
8. Electrical Connections
   a. All unit power wiring shall enter unit cabinet at a single, factory-prepared, knockout location.
   b. Thru-the-base capability
      i. Standard unit shall have a thru-the-base electrical location(s) using a raised, embossed portion of the unit basepan.
      ii. No basepan penetration, other than those authorized by the manufacturer, is permitted.
9. Component access panels (standard)
   a. Cabinet panels shall be easily removable for servicing.
   b. Stainless steel metal hinges are standard on all doors.
   c. Panels covering control box, indoor fan, indoor fan motor and gas components (where applicable), shall have 1/4 turn latches.

23 81 19.13.I. Gas Heat

1. General
   a. Heat exchanger shall be an induced draft design. Positive pressure heat exchanger designs shall not be allowed.
   b. Shall incorporate a direct-spark ignition system and redundant main gas valve.
   c. Heat exchanger design shall allow combustion process condensate to gravity drain; maintenance to drain the gas heat exchanger shall not be required.
   d. Gas supply pressure at the inlet to the rooftop unit gas valve must match that required by the manufacturer.
2. The heat exchanger shall be controlled by an integrated furnace controller (IFC) microprocessor.
   a. IFC board shall notify users of fault using an LED (light-emitting diode).
3. Standard Heat Exchanger construction
   a. Heat exchanger shall be of the tubular-section type constructed of a minimum of 20-gauge aluminum coated steel for corrosion resistance.
   b. Burners shall be of the in-shot type constructed of aluminum-coated steel.
   c. Burners shall incorporate orifices for rated heat output up to 2000 ft (610m) elevation. Additional accessory kits may be required for applications above 2000 ft (610m) elevation, depending on local gas supply conditions.
4. Optional Stainless Steel Heat Exchanger construction
   a. Use energy saving, direct-spark ignition system.
   b. Use a redundant main gas valve.
   c. Burners shall be of the in-shot type constructed of aluminum-coated steel.
   d. All gas piping shall enter the unit cabinet at a single location on side of unit (horizontal plane).
   e. The optional stainless steel heat exchanger shall be of the tubular-section type, constructed of a minimum of 20-gauge type 409 stainless steel.
   f. Type 409 stainless steel shall be used in heat exchanger tubes and vestibule plate.
   g. Complete stainless steel heat exchanger allows for greater application flexibility.
5. Induced draft combustion motors and blowers
   a. Shall be a direct-drive, single inlet, forward-curved centrifugal type.

b. Shall be made from steel with a corrosion-resistant finish.
c. Shall have permanently lubricated sealed bearings.
d. Shall have inherent thermal overload protection.
e. Shall have an automatic reset feature.

23 81 19.13.J. Coils

1. Standard Aluminum/Copper Coils:
   a. Standard evaporator and condenser coils shall have aluminum lanced plate fins mechanically bonded to seamless internally grooved copper tubes with all joints brazed.
   b. Evaporator and condenser coils shall be leak tested to 150 psig, pressure tested to 550 psig, and qualified to UL 1995 burst test at 2,200 psi.

23 81 19.13.K. Refrigerant Components

1. Refrigerant circuit shall include the following control, safety, and maintenance features:
   a. Thermal Expansion Valves (TXV) with orifice type distributor.
   b. Refrigerant filter drier.
   c. Service gauge connections on suction and discharge lines.
   d. Pressure gauge access through an access port in the front and rear panel of the unit.
2. Compressors
   a. Unit shall use one fully hermetic, scroll compressor for each independent refrigeration circuit.
   b. Compressor motors shall be cooled by refrigerant gas passing through motor windings.
   c. Compressors shall be internally protected from high discharge temperature conditions. Advanced Scroll Temperature Protection on 240-300 sizes.
   d. Compressors shall be protected from an over-temperature and over-amperage conditions by an internal, motor overload device.
   e. Compressor shall be factory mounted on rubber grommets.
   f. Compressor motors shall have internal line break thermal and current overload protection.
   g. Crankcase heaters shall not be required for normal operating range.

23 81 19.13.L. Filter Section

1. Filters access is specified in the unit cabinet section of this specification.
2. Filters shall be held in place by filter tray, facilitating easy removal and installation.
3. Shall consist of factory-installed, low velocity, throw-away 2-in. thick fiberglass filters.
4. Filter face velocity shall not exceed 365 fpm at nominal airflows.
5. Filters shall be standard, commercially available sizes.
6. Only one size filter per unit is allowed.

23 81 19.13.M. Evaporator Fan and Motor

1. Evaporator fan motor:
   a. Shall have permanently lubricated bearings.
   b. Shall have inherent automatic-reset thermal overload protection.
   c. Shall have a maximum continuous bhp rating for continuous duty operation; no safety factors above that rating shall be required.
2. Belt-driven Evaporator Fan:
   a. Belt drive shall include an adjustable-pitch motor pulley.
   b. Shall use sealed, permanently lubricated ball-bearing type.
   c. Blower fan shall be double-inlet type with forward-curved blades.
   d. Shall be constructed from steel with a corrosion resistant finish and dynamically balanced.

23 81 19.13.N. Condenser Fans and Motors

1. Condenser fan motors:
   a. Shall be a totally enclosed motor.
   b. Shall use permanently lubricated bearings.
   c. Shall have inherent thermal overload protection with an automatic reset feature.
   d. Shall use a shaft-down design. Shaft-up designs including those with “rain-slinger devices” shall not be allowed.
2. Condenser Fans shall:
   a. Shall be a direct-driven propeller type fan
   b. Shall have aluminum blades riveted to corrosion-resistant steel spiders and shall be dynamically balanced.

23 81 19.13.O. Special Features

1. Integrated Economizers:
   a. Integrated, gear-driven parallel modulating blade design type capable of simultaneous economizer and compressor operation.
   b. Independent modules for vertical or horizontal return configurations shall be available. Vertical return modules shall be available as a factory installed option.
   c. Damper blades shall be galvanized steel with metal gears. Plastic or composite blades on intake or return shall not be acceptable.
   d. Shall include all hardware and controls to provide free cooling with outdoor air when temperature and/or humidity are below setpoints.
   e. Shall be equipped with gear driven dampers for both the outdoor ventilation air and the return air for positive air stream control.
   f. Shall be capable of introducing up to 100% outdoor air.
   g. Shall be equipped with a barometric relief damper capable of relieving up to 100% return air. The barometric relief damper shall include seals, hardware and hoods to relieve building pressure. Damper shall gravity close upon unit shut down.
   h. Shall be designed to close damper(s) during loss-of-power situations with spring return built into motor.
   i. An outdoor single-enthalpy sensor shall be provided as standard. Outdoor air enthalpy set point shall be adjustable and shall range from the enthalpy equivalent of 63°F @ 50% rh to 73°F @ 50% rh. Additional sensor options shall be available as accessories.
   j. The economizer controller shall also provide control of an accessory power exhaust unit function. Factory set at 70%, with a range of 0% to 100%.
   k. The economizer shall maintain minimum airflow into the building during occupied period and provide design ventilation rate for full occupancy. A remote potentiometer may be used to override the damper set point.
   l. Economizer controller shall accept a 2-10Vdc CO2 sensor input for IAQ/DCV control. In this mode, dampers shall modulate the outdoor-air damper to provide ventilation based on the sensor input.
   m. Actuator shall be direct coupled to economizer gear. No linkage arms or control rods shall be acceptable.
   n. Economizer controller shall provide indications when in free cooling mode, in the DCV mode, or the exhaust fan contact is closed.
2. Two-Position Damper
   a. Damper shall be a Two-Position Damper. Damper travel shall be from the full closed position to the field adjustable %-open setpoint.
   b. Damper shall include adjustable damper travel from 25% to 100% (full open).
   c. Damper shall include single or dual blade, gear driven damper and actuator motor.
   d. Actuator shall be direct coupled to economizer gear. No linkage arms or control rods shall be acceptable.
   e. Damper will admit up to 100% outdoor air for applicable rooftop units.
   f. Damper shall close upon indoor (evaporator) fan shutoff and/or loss of power.
   g. The damper actuator shall plug into the rooftop unit's wiring harness plug. No hard wiring shall be required.
   h. Outside air hood shall include aluminum water entrainment filter.
3. Manual damper
   a. Manual damper package shall consist of damper, air inlet screen, and rain hood which can be preset to admit up to 50% outdoor air for year round ventilation.
4. Head Pressure Control Package
   a. Controller shall control coil head pressure by condenser-fan cycling.
5. Liquid Propane (LP) Conversion Kit
   a. Package shall contain all the necessary hardware and instructions to convert a standard natural gas unit for use with liquefied propane, up to 2000 ft (610m) elevation.
6. Unit-Mounted, Non-Fused Disconnect Switch:
   a. Switch shall be factory-installed, internally mounted.
   b. National Electric Code (NEC) and UL approved non-fused switch shall provide unit power shutoff.
   c. Shall be accessible from outside the unit.
   d. Shall provide local shutdown and lockout capability.
   e. Non-Powered convenience outlet.
   f. Outlet shall be powered from a separate 115-120v power source.
   g. A transformer shall not be included.
   h. Outlet shall be field-installed and internally mounted with easily accessible 115-v female receptacle.

i. Outlet shall include 15 amp GFI receptacle.
j. Outlet shall be accessible from outside the unit.

7. Flue Discharge Deflector:
   a. Flue discharge deflector shall direct unit exhaust vertically instead of horizontally.
   b. Deflector shall be defined as a “natural draft” device by the National Fuel and Gas (NFG) code.
8. Thru-the-Base Connectors:
   a. Kits shall provide connectors to permit gas and electrical connections to be brought to the unit through the unit basepan.
9. Propeller Power Exhaust:
   a. Power exhaust shall be used in conjunction with an integrated economizer.
   b. Independent modules for vertical or horizontal return configurations shall be available.
   c. Horizontal power exhaust is shall be mounted in return ductwork.
   d. Power exhaust shall be controlled by economizer controller operation. Exhaust fans shall be energized when dampers open past the 0-100% adjustable setpoint on the economizer control.
10. Roof Curbs (Vertical):
    a. Full perimeter roof curb with exhaust capability providing separate airstreams for energy recovery from the exhaust air without supply air contamination.
    b. Formed galvanized steel with wood nailer strip and shall be capable of supporting entire unit weight.
    c. Permits installation and securing of ductwork to curb prior to mounting unit on the curb.
11. Universal Gas Conversion Kit:
    a. Package shall contain all the necessary hardware and instructions to convert a standard natural gas unit to operate from 2000-7000 ft (610 to 2134m) elevation with natural gas or from 0-7000 ft (90-2134m) elevation with liquefied propane.
12. Outdoor Air Enthalpy Sensor:
    a. The outdoor air enthalpy sensor shall be used to provide single enthalpy control. When used in conjunction with a return air enthalpy sensor, the unit will provide differential enthalpy control. The sensor allows the unit to determine if outside air is suitable for free cooling.
13. Return Air Enthalpy Sensor:
    a. The return air enthalpy sensor shall be used in conjunction with an outdoor air enthalpy sensor to provide differential enthalpy control.
14. Indoor Air Quality (CO_2) Sensor:
    a. Shall be able to provide demand ventilation indoor air quality (IAQ) control.
    b. The IAQ sensor shall be available in wall mount with LED display. The set point shall have adjustment capability.
15. Smoke detectors:
    a. Shall be a Four-Wire Controller and Detector.
    b. Shall be environmental compensated with differential sensing for reliable, stable, and drift-free sensitivity.
    c. Shall use magnet-activated test/reset sensor switches.
    d. Shall have tool-less connection terminal access.
    e. Shall have a recessed momentary switch for testing and resetting the detector.
    f. Controller shall include:
       i. One set of normally open alarm initiation contacts for connection to an initiating device circuit on a fire alarm control panel
       ii. Two Form-C auxiliary alarm relays for interface with rooftop unit or other equipment.
       iii. One Form-C supervision (trouble) relay to control the operation of the Trouble LED on a remote test/reset station.
       iv. Capable of direct connection to two individual detector modules.
       v. Can be wired to up to 14 other duct smoke detectors for multiple fan shutdown applications.

26 29 23.12. Adjustable Frequency Drive

1. Unit shall be supplied with an electronic variable frequency drive for the supply air fan.
2. Drive shall be factory installed in an enclosed cabinet.
3. Drive shall meet UL Standard 95-5V.
4. The completed unit assembly shall be UL listed.
5. Drives are to be accessible through a tooled access hinged door assembly.
6. The unit manufacturer shall install all power and control wiring.
7. The supply air fan drive output shall be controlled by the factory installed main unit control system and drive status and operating speed shall be monitored and displayed at the main unit control panel.
8. Drive shall be programmed and factory run tested in the unit.

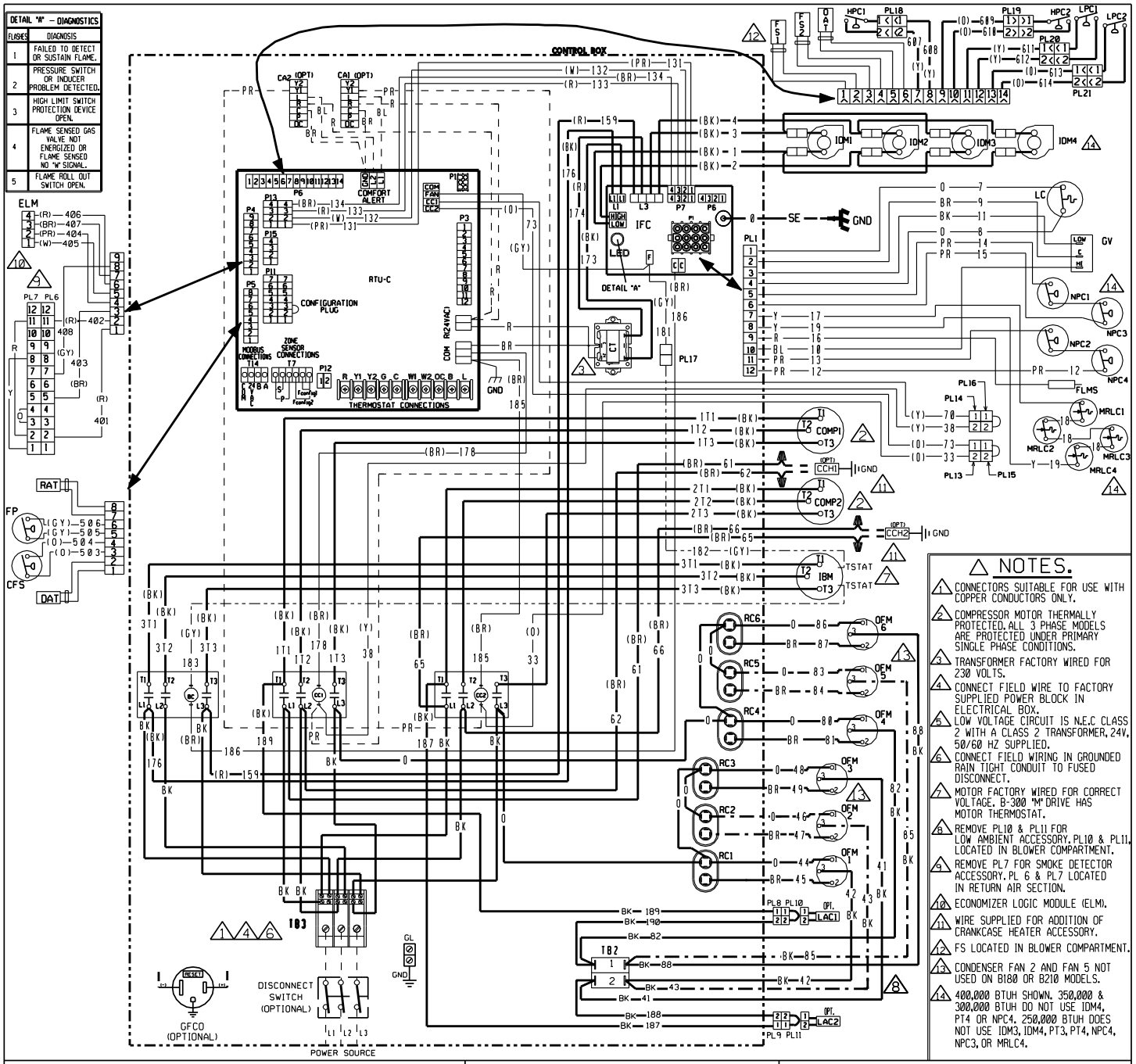

DETAIL "A" – DIAGNOSTICS	
FLASHES	DIAGNOSIS
1	FAILED TO DETECT OR SUSTAIN FLAME.
2	PRESSURE SWITCH OR INDUCER PROBLEM DETECTED.
3	HIGH LIMIT SWITCH PROTECTION DEVICE OPEN.
4	FLAME SENSED GAS VALVE NOT ENERGIZED OR FLAME SENSED NO "W" SIGNAL.
5	FLAME ROLL OUT SWITCH OPEN.

NOTES.

1. CONNECTORS SUITABLE FOR USE WITH COPPER CONDUCTORS ONLY.
2. COMPRESSOR MOTOR THERMALLY PROTECTED. ALL 3 PHASE MODELS ARE PROTECTED UNDER PRIMARY SINGLE PHASE CONDITIONS.
3. TRANSFORMER FACTORY WIRED FOR 230 VOLTS.
4. CONNECT FIELD WIRE TO FACTORY SUPPLIED POWER BLOCK IN ELECTRICAL BOX.
5. LOW VOLTAGE CIRCUIT IS N.E.C CLASS 2 WITH A CLASS 2 TRANSFORMER, 24V, 50/60 HZ SUPPLIED.
6. CONNECT FIELD WIRING IN GROUNDED RAIN TIGHT CONDUIT TO FUSED DISCONNECT.
7. MOTOR FACTORY WIRED FOR CORRECT VOLTAGE. B-300 "M" DRIVE HAS MOTOR THERMOSTAT.
8. REMOVE PL10 & PL11 FOR LOW AMBIENT ACCESSORY. PL10 & PL11 LOCATED IN BLOWER COMPARTMENT.
9. REMOVE PL7 FOR SMOKE DETECTOR ACCESSORY. PL 6 & PL7 LOCATED IN RETURN AIR SECTION.
10. ECONOMIZER LOGIC MODULE (ELM).
11. WIRE SUPPLIED FOR ADDITION OF CRANKCASE HEATER ACCESSORY.
12. FS LOCATED IN BLOWER COMPARTMENT.
13. CONDENSER FAN 2 AND FAN 5 NOT USED ON B180 OR B210 MODELS.
14. 400,000 BTUH SHOWN. 350,000 & 300,000 BTUH DO NOT USE IDM4, PT4 OR NPC4. 250,000 BTUH DOES NOT USE IDM3, IDM4, PT3, PT4, NPC4, NPC3, OR MRLC4.

COMPONENT CODE

BC	BLOWER CONTACTOR	IDM	INDUCED DRAFT MOTOR
CA	COMFORT ALERT MODULE	IFC	INTEGRATED FURNACE CONTROL
CC	COMPRESSOR CONTACTOR	LAC	LOW AMBIENT COOLING CONTROL
CCH	CRANKCASE HEATER	LC	LIMIT CONTROL
CFS	CLOGGED FILTER SWITCH	LPC	LOW PRESSURE CONTROL
COMP	COMPRESSOR	MRLC	MANUAL RESET LIMIT CONTROL
CT	CONTROL TRANSFORMER	NPC	NEGATIVE PRESSURE CONTROL
DAT	DISCHARGE AIR SENSOR	OAT	OUTSIDE AIR SENSOR
DISC	DISCONNECT SWITCH	OFM	OUTDOOR FAN MOTOR
FLMS	FLAME SENSOR	PL	PLUG
FP	FAN PROVING	PT	POWER TRANSFORMER
FS	FREEZE SENSOR	RAT	RETURN AIR SENSOR
GFCO	GROUND FAULT CONVENIENCE OUTLET	RC	RUN CAPACITOR
GL	GROUND LUG	RTU-C	ROOFTOP UNIT CONTROL
GND	GROUND	SE	SPARK ELECTRODE
GV	GAS VALVE	TB	TERMINAL BLOCK
HPC	HIGH PRESSURE CONTROL		WIRE NUT
IBM	INDOOR BLOWER MOTOR BELT DRIVE		

WIRING INFORMATION

LINE VOLTAGE
- -FACTORY STANDARD
- -FACTORY OPTION
- -FIELD INSTALLED

LOW VOLTAGE
- -FACTORY STANDARD
- -FACTORY OPTION
- -FIELD INSTALLED

REPLACEMENT WIRE
- -MUST BE THE SAME SIZE AND TYPE OF INSULATION AS ORIGINAL (105° C MIN.)

WARNING
- -CABINET MUST BE PERMANENTLY GROUNDED AND CONFORM TO I.E.C., N.E.C., C.E.C., AND LOCAL CODES AS APPLICABLE.

WIRE COLOR CODE

BK	BLACK	O	ORANGE
BR	BROWN	PR	PURPLE
BL	BLUE	R	RED
G	GREEN	W	WHITE
GY	GRAY	Y	YELLOW

WIRING DIAGRAM
(-)KNL-C180/210/240/300
(-)KRL-C240

208-230/460V 3 PH, 60 HZ.ROOFTOP W/RTU-C

DR. BY	APP. BY	DATE	DWG. NO.	REV
MGR		4-13-09	90-103079-02	03

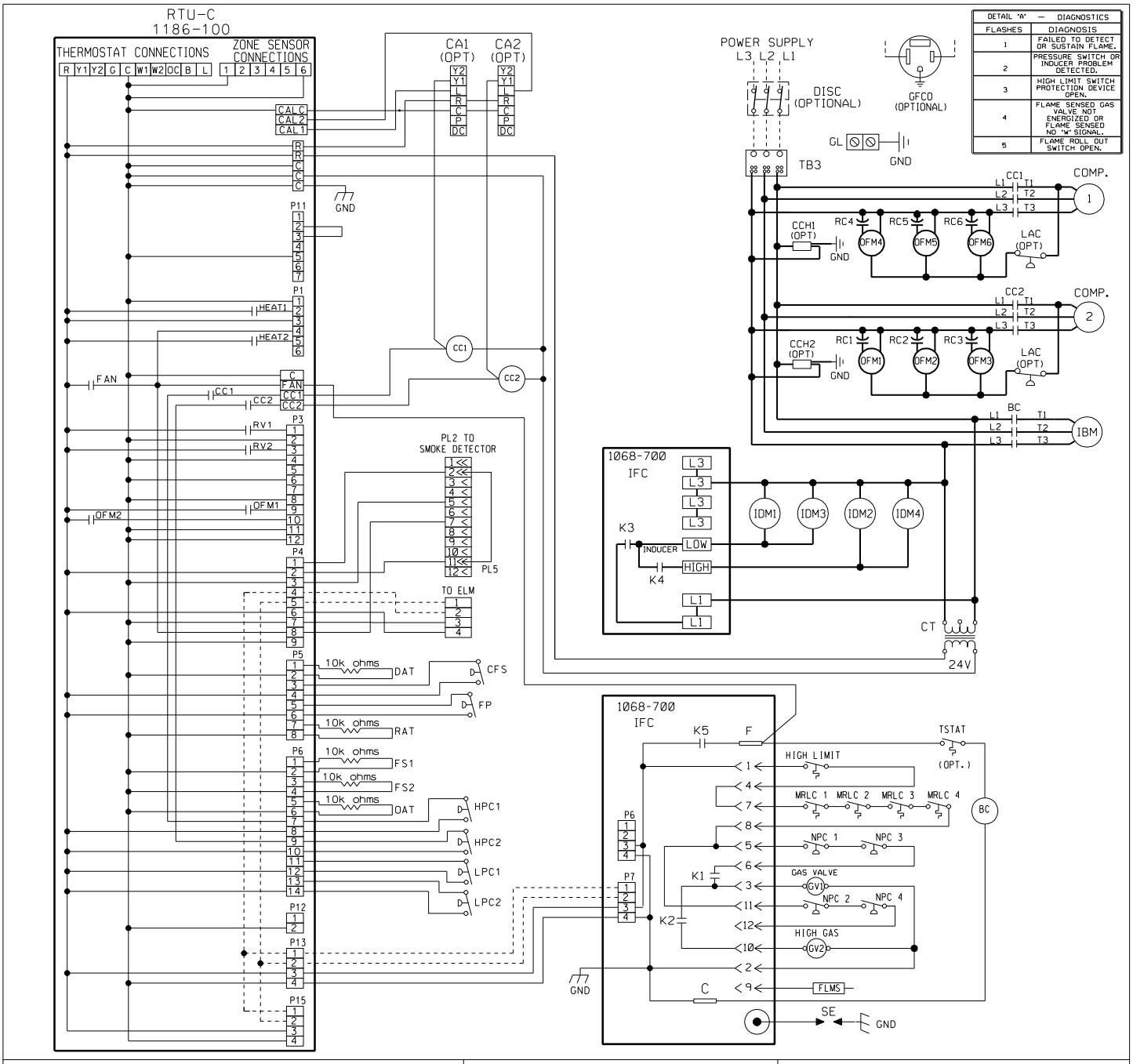

COMPONENT CODE

BC	BLOWER CONTACTOR	IDM	INDUCED DRAFT MOTOR
CA	COMFORT ALERT MODULE	IFC	INTEGRATED FURNACE CONTROL
CC	COMPRESSOR CONTACTOR	LAC	LOW AMBIENT COOLING CONTROL
CCH	CRANKCASE HEATER	LC	LIMIT CONTROL
CFS	CLOGGED FILTER SWITCH	LPC	LOW PRESSURE CONTROL
COMP	COMPRESSOR	MAS	MIX AIR SENSOR
CT	CONTROL TRANSFORMER	MRLC	MANUAL RESET LIMIT CONTROL
DISC	DISCONNECT SWITCH	NPC	NEGATIVE PRESSURE CONTROL
FLMS	FLAME SENSOR	OAT	OUTSIDE AIR SENSOR
FP	FAN PROVING	OFM	OUTDOOR FAN MOTOR
FS	FREEZE SENSOR	PL	PLUG
GFCO	GROUND FAULT CONVENIENCE OUTLET	RAT	RETURN AIR SENSOR
GL	GROUND LUG	RC	RUN CAPACITOR
GND	GROUND	SCC	SPACE COMFORT CONTROL
GV	GAS VALVE	SE	SPARK ELECTRODE
HPC	HIGH PRESSURE CONTROL	TB	TERMINAL BLOCK
IBM	INDOOR BLOWER MOTOR BELT DRIVE		WIRE NUT

WIRING INFORMATION

LINE VOLTAGE
- FACTORY STANDARD
- FACTORY OPTION
- FIELD INSTALLED

LOW VOLTAGE
- FACTORY STANDARD
- FACTORY OPTION
- FIELD INSTALLED

REPLACEMENT WIRE
- MUST BE THE SAME SIZE AND TYPE OF INSULATION AS ORIGINAL (105° C MIN.)

WARNING
- CABINET MUST BE PERMANENTLY GROUNDED AND CONFORM TO I.E.C., N.E.C., C.E.C., AND LOCAL CODES AS APPLICABLE.

WIRE COLOR CODE

BK__BLACK	O___ORANGE
BR__BROWN	PR__PURPLE
BL__BLUE	R___RED
G___GREEN	W___WHITE
GY__GRAY	Y___YELLOW

WIRING SCHEMATIC
RKNL-C180/210/240/300
208-230/460V 3 PH, 60 HZ.
ROOFTOP W/RTU-C

DR. BY	APP. BY	DATE	DWG. NO.	REV
MGR		7-16-09	90-103263-02	01

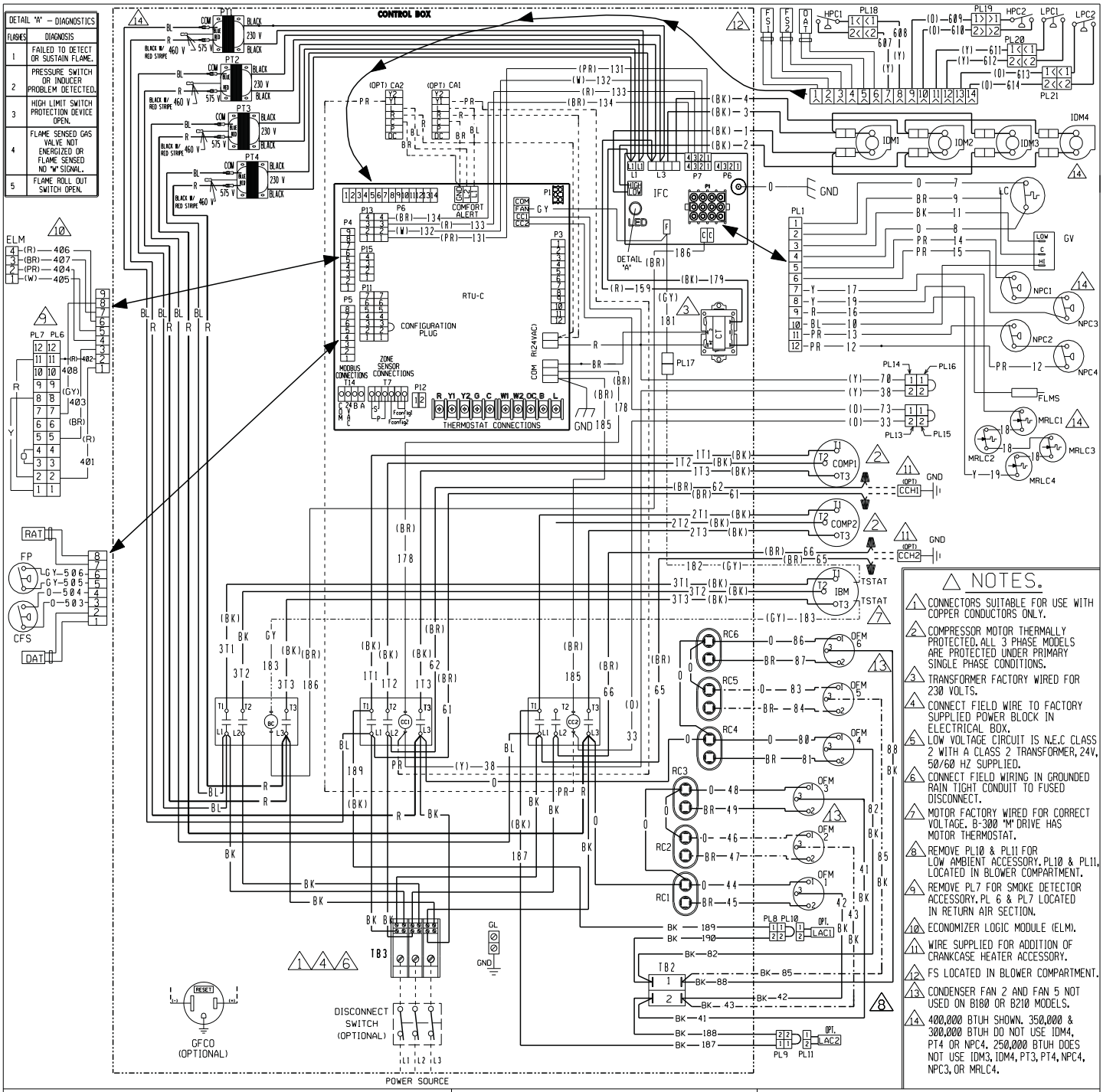

△ NOTES.

1. CONNECTORS SUITABLE FOR USE WITH COPPER CONDUCTORS ONLY.
2. COMPRESSOR MOTOR THERMALLY PROTECTED. ALL 3 PHASE MODELS ARE PROTECTED UNDER PRIMARY SINGLE PHASE CONDITIONS.
3. TRANSFORMER FACTORY WIRED FOR 230 VOLTS.
4. CONNECT FIELD WIRE TO FACTORY SUPPLIED POWER BLOCK IN ELECTRICAL BOX.
5. LOW VOLTAGE CIRCUIT IS N.E.C CLASS 2 WITH A CLASS 2 TRANSFORMER, 24V, 50/60 HZ SUPPLIED.
6. CONNECT FIELD WIRING IN GROUNDED RAIN TIGHT CONDUIT TO FUSED DISCONNECT.
7. MOTOR FACTORY WIRED FOR CORRECT VOLTAGE. B-300 "M" DRIVE HAS MOTOR THERMOSTAT.
8. REMOVE PL10 & PL11 FOR LOW AMBIENT ACCESSORY. PL10 & PL11, LOCATED IN BLOWER COMPARTMENT.
9. REMOVE PL7 FOR SMOKE DETECTOR ACCESSORY. PL 6 & PL7 LOCATED IN RETURN AIR SECTION.
10. ECONOMIZER LOGIC MODULE (ELM).
11. WIRE SUPPLIED FOR ADDITION OF CRANKCASE HEATER ACCESSORY.
12. FS LOCATED IN BLOWER COMPARTMENT.
13. CONDENSER FAN 2 AND FAN 5 NOT USED ON B180 OR B210 MODELS.
14. 400,000 BTUH SHOWN. 350,000 & 300,000 BTUH DO NOT USE IDM4, PT4 OR NPC4. 250,000 BTUH DOES NOT USE IDM3, IDM4, PT3, PT4, NPC4, NPC3, OR MRLC4.

COMPONENT CODE

BC	BLOWER CONTACTOR	IDM	INDUCED DRAFT MOTOR
CA	COMFORT ALERT MODULE	IFC	INTEGRATED FURNACE CONTROL
CC	COMPRESSOR CONTACTOR	LAC	LOW AMBIENT COOLING CONTROL
CCH	CRANKCASE HEATER	LC	LIMIT CONTROL
CFS	CLOGGED FILTER SWITCH	LPC	LOW PRESSURE CONTROL
COMP	COMPRESSOR	MRLC	MANUAL RESET LIMIT CONTROL
CT	CONTROL TRANSFORMER	NPC	NEGATIVE PRESSURE CONTROL
DAT	DISCHARGE AIR SENSOR	OAT	OUTSIDE AIR SENSOR
DISC	DISCONNECT SWITCH	OFM	OUTDOOR FAN MOTOR
FLMS	FLAME SENSOR	PL	PLUG
FP	FAN PROVING	PT	POWER TRANSFORMER
FS	FREEZE SENSOR	RAT	RETURN AIR SENSOR
GFCO	GROUND FAULT CONVENIENCE OUTLET	RC	RUN CAPACITOR
GL	GROUND LUG	RTU-C	ROOFTOP UNIT CONTROL
GND	GROUND	SE	SPARK ELECTRODE
GV	GAS VALVE	TB	TERMINAL BLOCK
HPC	HIGH PRESSURE CONTROL		WIRE NUT
IBM	INDOOR BLOWER MOTOR BELT DRIVE		

WIRING INFORMATION

LINE VOLTAGE
- -FACTORY STANDARD
- -FACTORY OPTION
- -FIELD INSTALLED

LOW VOLTAGE
- -FACTORY STANDARD
- -FACTORY OPTION
- -FIELD INSTALLED

REPLACEMENT WIRE
- -MUST BE THE SAME SIZE AND TYPE OF INSULATION AS ORIGINAL (105° C MIN.)

WARNING
- -CABINET MUST BE PERMANENTLY GROUNDED AND CONFORM TO I.E.C., N.E.C., C.E.C., AND LOCAL CODES AS APPLICABLE.

WIRE COLOR CODE

BK	BLACK	O	ORANGE
BR	BROWN	PR	PURPLE
BL	BLUE	R	RED
G	GREEN	W	WHITE
GY	GRAY	Y	YELLOW

WIRING DIAGRAM
RKNL-C180/210/240/300
575V 3 PH, 60 HZ.
ROOFTOP W/RTU-C

DR. BY	APP. BY	DATE	DWG. NO.	REV
MGR		4-8-09	90-103079-01	02

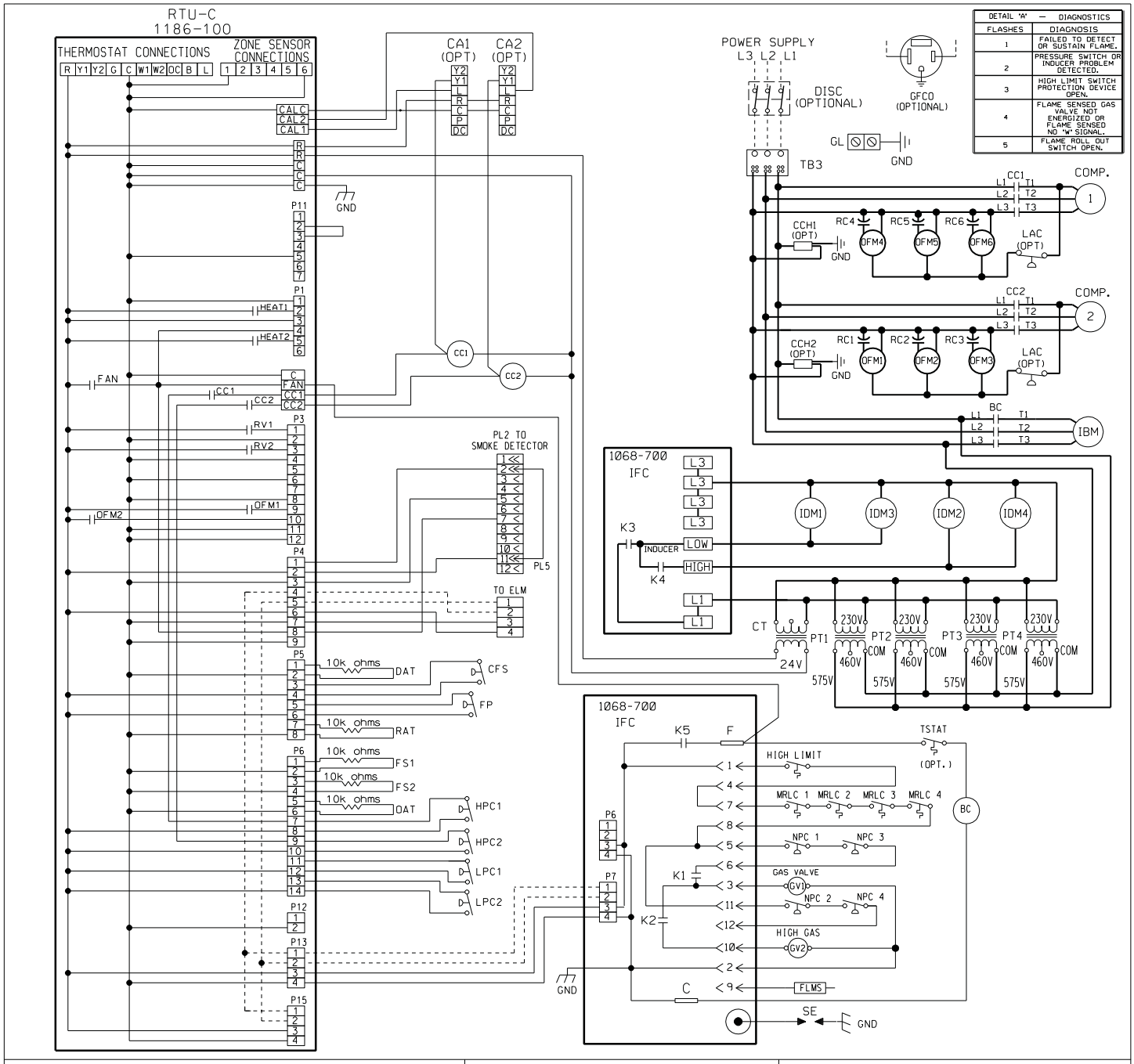

DETAIL 'A' — DIAGNOSTICS	
FLASHES	DIAGNOSIS
1	FAILED TO DETECT OR SUSTAIN FLAME.
2	PRESSURE SWITCH OR INDUCER PROBLEM DETECTED.
3	HIGH LIMIT SWITCH PROTECTION DEVICE OPEN.
4	FLAME SENSED GAS VALVE NOT ENERGIZED OR FLAME SENSED NO 'W' SIGNAL.
5	FLAME ROLL OUT SWITCH OPEN.

COMPONENT CODE

BC	BLOWER CONTACTOR	IDM	INDUCED DRAFT MOTOR
CA	COMFORT ALERT MODULE	IFC	INTEGRATED FURNACE CONTROL
CC	COMPRESSOR CONTACTOR	LAC	LOW AMBIENT COOLING CONTROL
CCH	CRANKCASE HEATER	LC	LIMIT CONTROL
CFS	CLOGGED FILTER SWITCH	LPC	LOW PRESSURE CONTROL
COMP	COMPRESSOR	MAS	MIX AIR SENSOR
CT	CONTROL TRANSFORMER	MRLC	MANUAL RESET LIMIT CONTROL
DISC	DISCONNECT SWITCH	NPC	NEGATIVE PRESSURE CONTROL
FLMS	FLAME SENSOR	OAT	OUTSIDE AIR SENSOR
FP	FAN PROVING	OFM	OUTDOOR FAN MOTOR
FS	FREEZE SENSOR	PL	PLUG
GFCO	GROUND FAULT CONVENIENCE OUTLET	RAT	RETURN AIR SENSOR
GL	GROUND LUG	RC	RUN CAPACITOR
GND	GROUND	SCC	SPACE COMFORT CONTROL
GV	GAS VALVE	SE	SPARK ELECTRODE
HPC	HIGH PRESSURE CONTROL	TB	TERMINAL BLOCK
IBM	INDOOR BLOWER MOTOR BELT DRIVE		WIRE NUT

WIRING INFORMATION

LINE VOLTAGE
- -FACTORY STANDARD
- -FACTORY OPTION
- -FIELD INSTALLED

LOW VOLTAGE
- -FACTORY STANDARD
- -FACTORY OPTION
- -FIELD INSTALLED

REPLACEMENT WIRE
- -MUST BE THE SAME SIZE AND TYPE OF INSULATION AS ORIGINAL (105° C MIN.)

WARNING
- -CABINET MUST BE PERMANENTLY GROUNDED AND CONFORM TO I.E.C., N.E.C., C.E.C., AND LOCAL CODES AS APPLICABLE.

WIRE COLOR CODE

BK__BLACK	O___ORANGE
BR__BROWN	PR__PURPLE
BL__BLUE	R___RED
G___GREEN	W___WHITE
GY__GRAY	Y___YELLOW

WIRING SCHEMATIC
RKNL-C180/210/240/300
575V 3 PH, 60 HZ.
ROOFTOP W/RTU-C

DR. BY	APP. BY	DATE	DWG. NO.	REV
MGR		7-13-09	90-103263-01	01

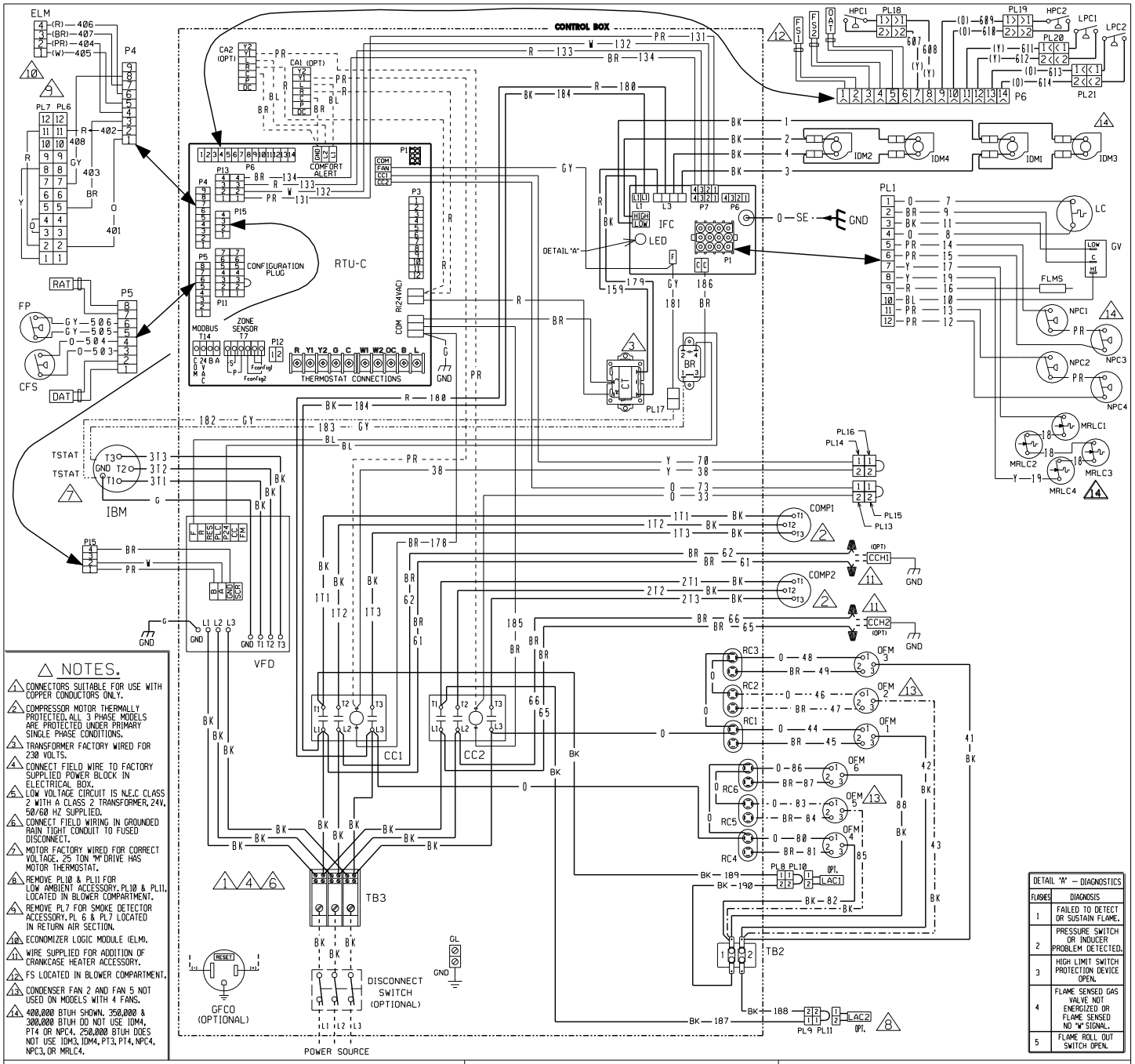

NOTES.

1. CONNECTORS SUITABLE FOR USE WITH COPPER CONDUCTORS ONLY.
2. COMPRESSOR MOTOR THERMALLY PROTECTED. ALL 3 PHASE MODELS ARE PROTECTED UNDER PRIMARY SINGLE PHASE CONDITIONS.
3. TRANSFORMER FACTORY WIRED FOR 230 VOLTS.
4. CONNECT FIELD WIRE TO FACTORY SUPPLIED POWER BLOCK IN ELECTRICAL BOX.
5. LOW VOLTAGE CIRCUIT IS N.E.C CLASS 2 WITH A CLASS 2 TRANSFORMER, 24V, 50/60 HZ SUPPLIED.
6. CONNECT FIELD WIRING IN GROUNDED RAIN TIGHT CONDUIT TO FUSED DISCONNECT.
7. MOTOR FACTORY WIRED FOR CORRECT VOLTAGE. 25 TON "M" DRIVE HAS MOTOR THERMOSTAT.
8. REMOVE PL10 & PL11 FOR LOW AMBIENT ACCESSORY. PL10 & PL11, LOCATED IN BLOWER COMPARTMENT.
9. REMOVE PL7 FOR SMOKE DETECTOR ACCESSORY. PL 6 & PL 7 LOCATED IN RETURN AIR SECTION.
10. ECONOMIZER LOGIC MODULE (ELM).
11. WIRE SUPPLIED FOR ADDITION OF CRANKCASE HEATER ACCESSORY.
12. FS LOCATED IN BLOWER COMPARTMENT.
13. CONDENSER FAN 2 AND FAN 5 NOT USED ON MODELS WITH 4 FANS.
14. 400,000 BTUH SHOWN. 350,000 & 300,000 BTUH DO NOT USE IDM4, PT4 OR NPC4. 250,000 BTUH DOES NOT USE IDM3, IDM4, PT3, PT4, NPC4, NPC3, OR MRLC4.

DETAIL "A" – DIAGNOSTICS	
FLASHES	DIAGNOSIS
1	FAILED TO DETECT OR SUSTAIN FLAME.
2	PRESSURE SWITCH OR INDUCER PROBLEM DETECTED.
3	HIGH LIMIT SWITCH PROTECTION DEVICE OPEN.
4	FLAME SENSED GAS VALVE NOT ENERGIZED OR FLAME SENSED NO "M" SIGNAL.
5	FLAME ROLL OUT SWITCH OPEN.

COMPONENT CODE

BR	BLOWER RELAY
CA	COMFORT ALERT MODULE
CC	COMPRESSOR CONTACTOR
CCH	CRANKCASE HEATER
CFS	CLOGGED FILTER SWITCH
COMP	COMPRESSOR
CT	CONTROL TRANSFORMER
DAT	DISCHARGE AIR SENSOR
DISC	DISCONNECT SWITCH
FLMS	FLAME SENSOR
FP	FAN PROVING
FS	FREEZE SENSOR
GFCO	GROUND FAULT CONVENIENCE OUTLET
GL	GROUND LUG
GND	GROUND
GV	GAS VALVE
HPC	HIGH PRESSURE CONTROL
IBM	INDOOR BLOWER MOTOR BELT DRIVE
IDM	INDUCED DRAFT MOTOR
IFC	INTEGRATED FURNACE CONTROL
LAC	LOW AMBIENT COOLING CONTROL
LC	LIMIT CONTROL
LPC	LOW PRESSURE CONTROL
MRLC	MANUAL RESET LIMIT CONTROL
NPC	NEGATIVE PRESSURE CONTROL
OAT	OUTSIDE AIR SENSOR
OFM	OUTDOOR FAN MOTOR
PL	PLUG
RAT	RETURN AIR SENSOR
RC	RUN CAPACITOR
RTU-C	ROOFTOP UNIT CONTROL
SE	SPARK ELECTRODE
TB	TERMINAL BLOCK
VFD	VARIABLE FREQUENCY DRIVE
⚠	WIRE NUT

WIRING INFORMATION

LINE VOLTAGE
- -FACTORY STANDARD
- -FACTORY OPTION
- -FIELD INSTALLED

LOW VOLTAGE
- -FACTORY STANDARD
- -FACTORY OPTION
- -FIELD INSTALLED

REPLACEMENT WIRE
- -MUST BE THE SAME SIZE AND TYPE OF INSULATION AS ORIGINAL (105˚C MIN.)

WARNING
- -CABINET MUST BE PERMANENTLY GROUNDED AND CONFORM TO I.E.C., N.E.C., C.E.C., AND LOCAL CODES AS APPLICABLE.

WIRE COLOR CODE

BK	BLACK	O	ORANGE
BR	BROWN	PR	PURPLE
BL	BLUE	R	RED
G	GREEN	W	WHITE
GY	GRAY	Y	YELLOW

WIRING DIAGRAM
VFD MODELS

208-230/460V 3 PH, 60 HZ.
ROOFTOP W/RTU-C

DR. BY	APP. BY	DATE	DWG. NO.	REV
MCB		01-04-12	90-103079-08	00

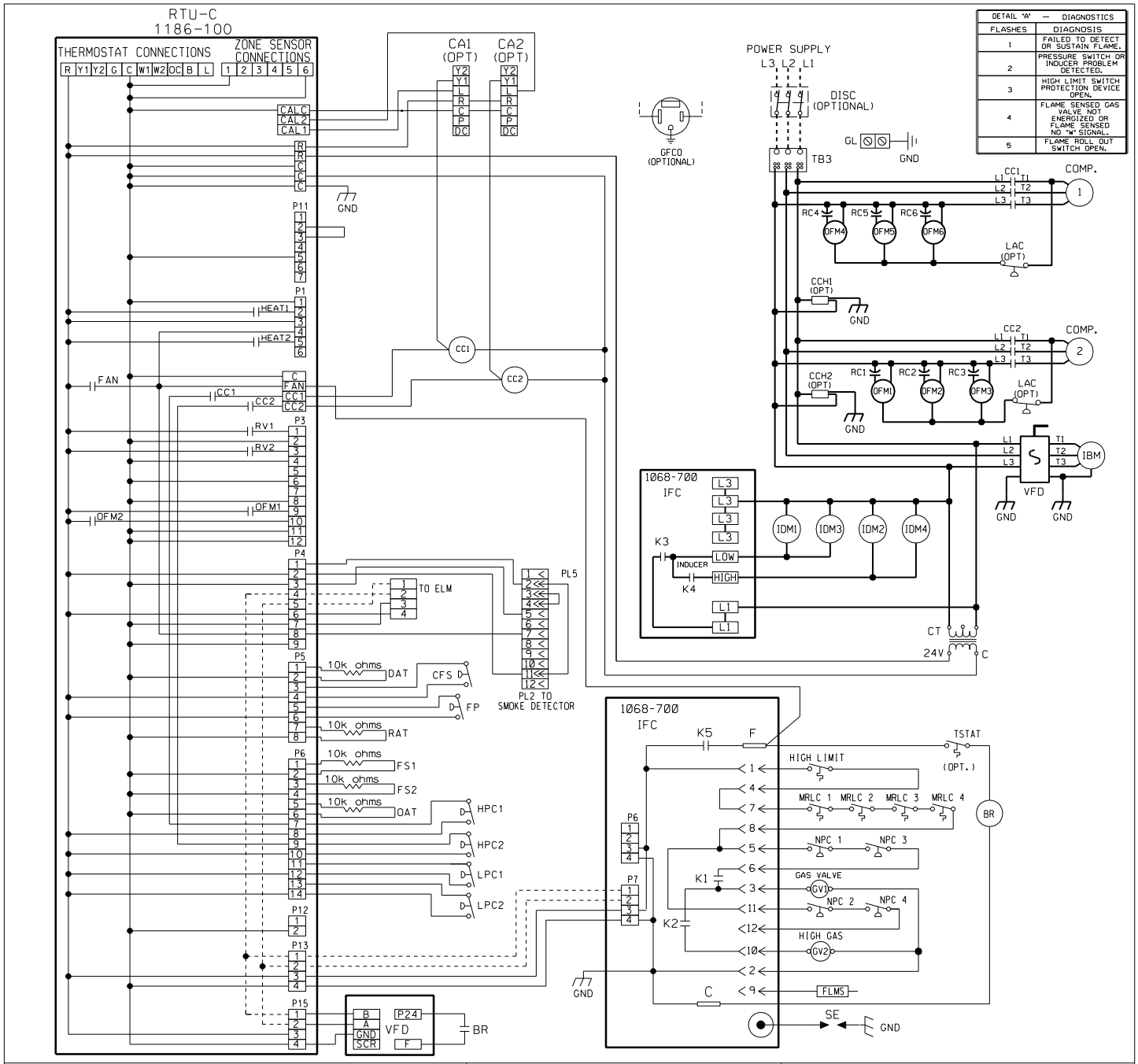

COMPONENT CODE

BR	BLOWER RELAY
CA	COMFORT ALERT MODULE
CC	COMPRESSOR CONTACTOR
CCH	CRANKCASE HEATER
CFS	CLOGGED FILTER SWITCH
COMP	COMPRESSOR
CT	CONTROL TRANSFORMER
DAT	DISCHARGE AIR SENSOR
DISC	DISCONNECT SWITCH
FLMS	FLAME SENSOR
FP	FAN PROVING
FS	FREEZE SENSOR
GFCO	GROUND FAULT CONVENIENCE OUTLET
GL	GROUND LUG
GND	GROUND
GV	GAS VALVE
HPC	HIGH PRESSURE CONTROL
IBM	INDOOR BLOWER MOTOR BELT DRIVE
IDM	INDUCED DRAFT MOTOR
IFC	INTEGRATED FURNACE CONTROL
LAC	LOW AMBIENT COOLING CONTROL
LC	LIMIT CONTROL
LPC	LOW PRESSURE CONTROL
MRLC	MANUAL RESET LIMIT CONTROL
NPC	NEGATIVE PRESSURE CONTROL
OAT	OUTSIDE AIR SENSOR
OFM	OUTDOOR FAN MOTOR
PL	PLUG
RAT	RETURN AIR SENSOR
RC	RUN CAPACITOR
RTU-C	ROOFTOP UNIT CONTROL
SE	SPARK ELECTRODE
TB	TERMINAL BLOCK
VFD	VARIABLE FREQUENCY DRIVE
▲	WIRE NUT

WIRING INFORMATION

LINE VOLTAGE
- -FACTORY STANDARD
- -FACTORY OPTION
- -FIELD INSTALLED

LOW VOLTAGE
- -FACTORY STANDARD
- -FACTORY OPTION
- -FIELD INSTALLED

REPLACEMENT WIRE
- -MUST BE THE SAME SIZE AND TYPE OF INSULATION AS ORIGINAL (105° C MIN.)

WARNING
- -CABINET MUST BE PERMANENTLY GROUNDED AND CONFORM TO I.E.C., N.E.C., C.E.C., AND LOCAL CODES AS APPLICABLE.

WIRE COLOR CODE

BK__BLACK	O___ORANGE
BR__BROWN	PR__PURPLE
BL__BLUE	R___RED
G___GREEN	W___WHITE
GY__GRAY	Y___YELLOW

WIRING SCHEMATIC
VFD MODELS

208-230/460V 3 PH, 60 HZ.
ROOFTOP W/RTU-C

DR. BY	APP. BY	DATE	DWG. NO.	REV
MCB		01-04-12	90-103263-08	00

BEFORE PURCHASING THIS APPLIANCE, READ IMPORTANT ENERGY COST AND EFFICIENCY INFORMATION AVAILABLE FROM YOUR RETAILER.

GENERAL TERMS OF LIMITED WARRANTY*

Rheem will furnish a replacement for any part of this product which fails in normal use and service within the applicable periods stated, in accordance with the terms of the limited warranty.

Compressor
3 Phase, Commercial Applications .....Five (5) Years

Parts
3 Phase, Commercial Applications.....One (1) Year

Factory Standard Heat Exchanger
3 Phase, Commercial Applications .....Ten (10) Years

Stainless Steel Heat Exchanger
3 Phase, Commercial Applications .....Twenty (20) Years

***For complete details of the Limited and Conditional Warranties, including applicable terms and conditions, contact your local contractor or the Manufacturer for a copy of the product warranty certificate.**

The new degree of comfort.™

In keeping with its policy of continuous progress and product improvement, Rheem reserves the right to make changes without notice.

Rheem Heating, Cooling & Water Heating • P.O. Box 17010
Fort Smith, Arkansas 72917 • www.rheem.com

Rheem Canada Ltd./Ltée • 125 Edgeware Road, Unit 1
Brampton, Ontario • L6Y 0P5

INTEGRATED AIR & WATER

PRINTED IN U.S.A 01/13 QG FORM NO. R11-854 REV. 1